

# TRP100 1200/5A 5P10

TRP100 1200/5A 5P10, Transformador de protección, encapsulados en resina, diámetro interior 100 mm

Código: P50343.

> Sección útil (mm): 100
> Precisión: 5P10
> Rango medida (A): 1200/5
> Potencia (VA): 10

## Especificaciones

### Características mecánicas

| | |
|---|---|
| Tamaño (mm) ancho x alto x fondo | 190 x 230 x 66 (mm) |
| Peso Neto (kg) | 3,4 |

**TRP**
Transformador de protección, encapsulados en resina

| CÓDIGO | TIPO | Sección útil (mm) | Rango medida (A) |
|---|---|---|---|
| P50311. | TRP40 100/5A 5P10 | 40 | 100/5 |
| P50312. | TRP40 150/5A 5P10 | 40 | 150/5 |
| P50313. | TRP40 200/5A 5P10 | 40 | 200/5 |
| P50314. | TRP40 250/5A 5P10 | 40 | 250/5 |
| P50315. | TRP40 300/5A 5P10 | 40 | 300/5 |
| P50316. | TRP40 400/5A 5P10 | 40 | 400/5 |
| P50317. | TRP40 500/5A 5P10 | 40 | 500/5 |
| P50211. | TRP40 100/5A 5P20 | 40 | 100/5 |
| P50212. | TRP40 150/5A 5P20 | 40 | 150/5 |
| P50213. | TRP40 200/5A 5P20 | 40 | 200/5 |
| P50214. | TRP40 250/5A 5P20 | 40 | 250/5 |
| P50215. | TRP40 300/5A 5P20 | 40 | 300/5 |
| P50216. | TRP40 400/5A 5P20 | 40 | 400/5 |
| P50217. | TRP40 500/5A 5P20 | 40 | 500/5 |
| P50321. | TRP60 150/5A 5P10 | 60 | 150/5 |
| P50322. | TRP60 200/5A 5P10 | 60 | 200/5 |
| P50323. | TRP60 250/5A 5P10 | 60 | 250/5 |
| P50324. | TRP60 300/5A 5P10 | 60 | 300/5 |
| P50325. | TRP60 400/5A 5P10 | 60 | 400/5 |
| P50326. | TRP60 500/5A 5P10 | 60 | 500/5 |
| P50327. | TRP60 600/5A 5P10 | 60 | 600/5 |
| P50328. | TRP60 750/5A 5P10 | 60 | 750/5 |
| P50329. | TRP60 1000/5A 5P10 | 60 | 1000/5 |
| P50221. | TRP60 150/5A 5P20 | 60 | 150/5 |
| P50222. | TRP60 200/5A 5P20 | 60 | 200/5 |



# TRP100 1200/5A 5P10

Código: P50343.

| CÓDIGO | TIPO | Sección útil (mm) | Rango medida (A) |
|---|---|---|---|
| P50223. | TRP60 250/5A 5P20 | 60 | 250/5 |
| P50224. | TRP60 300/5A 5P20 | 60 | 300/5 |
| P50225. | TRP60 400/5A 5P20 | 60 | 400/5 |
| P50226. | TRP60 500/5A 5P20 | 60 | 500/5 |
| P50227. | TRP60 600/5A 5P20 | 60 | 600/5 |
| P50228. | TRP60 750/5A 5P20 | 60 | 750/5 |
| P50229. | TRP60 1000/5A 5P20 | 60 | 1000/5 |
| P50331. | TRP80 250/5A 5P10 | 80 | 250/5 |
| P50332. | TRP80 300/5A 5P10 | 80 | 300/5 |
| P50333. | TRP80 400/5A 5P10 | 80 | 400/5 |
| P50334. | TRP80 500/5A 5P10 | 80 | 500/5 |
| P50335. | TRP80 600/5A 5P10 | 80 | 600/5 |
| P50336. | TRP80 800/5A 5P10 | 80 | 800/5 |
| P50337. | TRP80 1000/5A 5P10 | 80 | 1000/5 |
| P50338. | TRP80 1200/5A 5P10 | 80 | 1200/5 |
| P50339. | TRP80 1500/5A 5P10 | 80 | 1500/5 |
| P50231. | TRP80 250/5A 5P20 | 80 | 250/5 |
| P50232. | TRP80 300/5A 5P20 | 80 | 300/5 |
| P50233. | TRP80 400/5A 5P20 | 80 | 400/5 |
| P50234. | TRP80 500/5A 5P20 | 80 | 500/5 |
| P50235. | TRP80 600/5A 5P20 | 80 | 600/5 |
| P50236. | TRP80 800/5A 5P20 | 80 | 800/5 |
| P50237. | TRP80 1000/5A 5P20 | 80 | 1000/5 |
| P50238. | TRP80 1200/5A 5P20 | 80 | 1200/5 |
| P50239. | TRP80 1500/5A 5P20 | 80 | 1500/5 |
| P50341. | TRP100 750/5A 5P10 | 100 | 750/5 |
| P50342. | TRP100 1000/5A 5P10 | 100 | 1000/5 |
| P50343. | TRP100 1200/5A 5P10 | 100 | 1200/5 |
| P50344. | TRP100 1500/5A 5P10 | 100 | 1500/5 |
| P50346. | TRP100 2000/5A 5P10 | 100 | 2000/5 |
| P50347. | TRP100 2500/5A 5P10 | 100 | 2500/5 |
| P50348. | TRP100 3000/5A 5P10 | 100 | 3000/5 |
| P50241. | TRP100 750/5A 5P20 | 100 | 750/5 |
| P50242. | TRP100 1000/5A 5P20 | 100 | 1000/5 |
| P50243. | TRP100 1200/5A 5P20 | 100 | 1200/5 |
| P50244. | TRP100 1500/5A 5P20 | 100 | 1500/5 |
| P50246. | TRP100 2000/5A 5P20 | 100 | 2000/5 |
| P50247. | TRP100 2500/5A 5P20 | 100 | 2500/5 |
| P50248. | TRP100 3000/5A 5P20 | 100 | 3000/5 |
| P50351. | TRP140 1000/5A 5P10 | 140 | 1000/5 |



# TRP100 1200/5A 5P10

Código: P50343.

| CÓDIGO | TIPO | Sección útil (mm) | Rango medida (A) |
|---|---|---|---|
| P50352. | TRP140 1250/5A 5P10 | 140 | 1250/5 |
| P50353. | TRP140 1500/5A 5P10 | 140 | 1500/5 |
| P50354. | TRP140 2000/5A 5P10 | 140 | 2000/5 |
| P50355. | TRP140 2500/5A 5P10 | 140 | 2500/5 |
| P50356. | TRP140 3000/5A 5P10 | 140 | 3000/5 |
| P50357. | TRP140 4000/5A 5P10 | 140 | 4000/5 |
| P50251. | TRP140 1000/5A 5P20 | 140 | 1000/5 |
| P50252. | TRP140 1250/5A 5P20 | 140 | 1250/5 |
| P50253. | TRP140 1500/5A 5P20 | 140 | 1500/5 |
| P50254. | TRP140 2000/5A 5P20 | 140 | 2000/5 |
| P50255. | TRP140 2500/5A 5P20 | 140 | 2500/5 |
| P50256. | TRP140 3000/5A 5P20 | 140 | 3000/5 |
| P50257. | TRP140 4000/5A 5P20 | 140 | 4000/5 |
| P50361. | TRP180 1500/5A 5P10 | 180 | 1500/5 |
| P50362. | TRP180 2000/5A 5P10 | 180 | 2000/5 |
| P50363. | TRP180 2500/5A 5P10 | 180 | 2500/5 |
| P50364. | TRP180 3000/5A 5P10 | 180 | 3000/5 |
| P50365. | TRP180 4000/5A 5P10 | 180 | 4000/5 |
| P50366. | TRP180 5000/5A 5P10 | 180 | 5000/5 |
| P50261. | TRP180 1500/5A 5P20 | 180 | 1500/5 |
| P50262. | TRP180 2000/5A 5P20 | 180 | 2000/5 |
| P50263. | TRP180 2500/5A 5P20 | 180 | 2500/5 |
| P50264. | TRP180 3000/5A 5P20 | 180 | 3000/5 |
| P50265. | TRP180 4000/5A 5P20 | 180 | 4000/5 |
| P50266. | TRP180 5000/5A 5P20 | 180 | 5000/5 |

Otros valores, consultar. PARA CODIFICAR OTROS PARÁMETROS ver tabla al final apartado



# TRP100 1200/5A 5P10

Código: P50343.

## Dimensiones

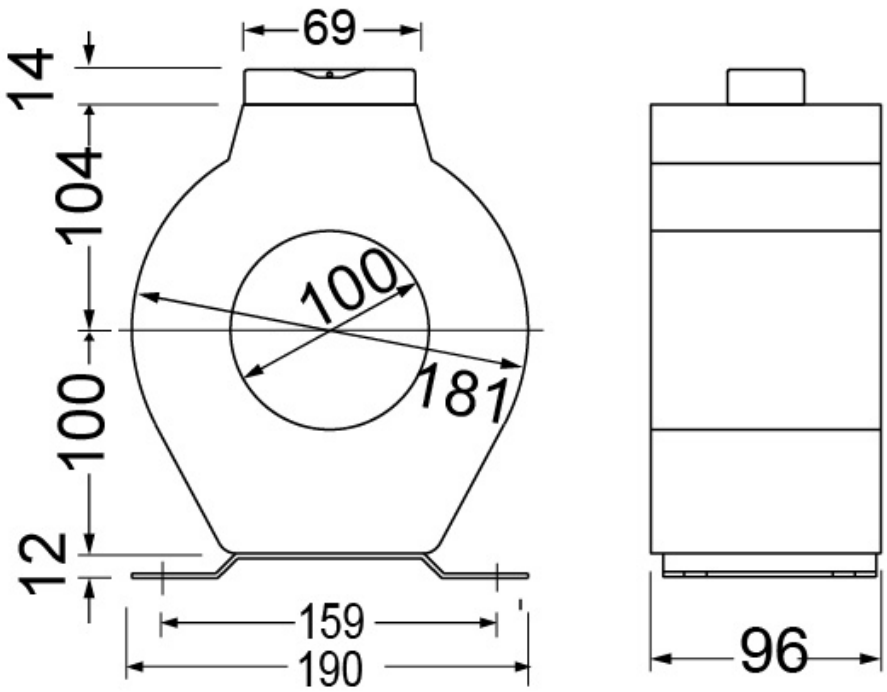




Fecha creación: 24/11/2026 - CIRCUTOR, SAU se reserva el derecho de realizar cambios técnicos o modificar el contenido/imágenes de este documento sin previo aviso, para mejorar su fiabilidad, funcionalidad, diseño o por otros motivos.
No acepta responsabilidad alguna por los posibles errores, inexactitud o la posible falta de información en el mismo.