,

Code:

Description

COFRET boxes are designed to offer electrical protection in compliance with the **ITC-BT-52** standard for infrastructures designed to charge electric vehicles. The devices have a Type A RCCB for direct or indirect exposure protection, and a C-curve circuit breaker to protect the recharging units in the event of overloads or short-circuits. If the installation does not have overvoltage protection, a model is available that includes both permanent and transient surge protection.

Application

The **COFRET** box is absolutely essential when installing any single-phase electric vehicle charging point.

Creation date: 27/11/2026 - CIRCUTOR, SAU reserves the right to make technical changes or modify the content/images of this document without prior notice, in order to improve its reliability, functionality, design or for other reasons.
It accepts no liability for any errors, inaccuracies or possible lack of information in this document.



Code:

Specifications

Mechanical characteristics

Size (mm) width x height x depth	215 x 200 x 115 (mm)
Weight (kg)	2

COFRET

Protection box for charging points

CODE	TYPE	Earth leakage protection	Circuit breaker protection	Surge Protection (SPD)	Módules	Poles	Energy meter	Surge Protection (SPD+POP)
2 poles								
V41232.	COFRET-VE6-2P-20AS	Type A	20 A	Yes	6	2	-	
V4123Q.	COFRET-VE8-2P-20AS 6DC	Type A + 6 mADC	20 A	Yes	8	2	-	
V41261.	COFRET-VE6-2P-40A	Type A	40 A	No	6	2	-	
V41262.	COFRET-VE6-2P-40AS	Type A	40 A	Yes	6	2	-	
V41266.	COFRET-VE8-2P-40AS-MID	Type A	40 A	Yes	8	2	MID	
2 poles - Meter reconnection scheme 2								
V4126X.	COFRET-VE8-2P-40AS REC	Type A	40 A		8	2	-	Yes
4 poles								
V41461.	COFRET-VE12-4P-40A	Type A	40 A	No	12	4	-	
V41462.	COFRET-VE12-4P-40AS	Type A	40 A	Yes	12	4	-	

Electrical protections in accordance with ITC-BT-52 standard, Circuit breaker protection with C curve, 30 mA differential protection, Key closure, Polycarbonate and polystyrene enclosure - IP 65 - IK08.



Code:

Dimensions

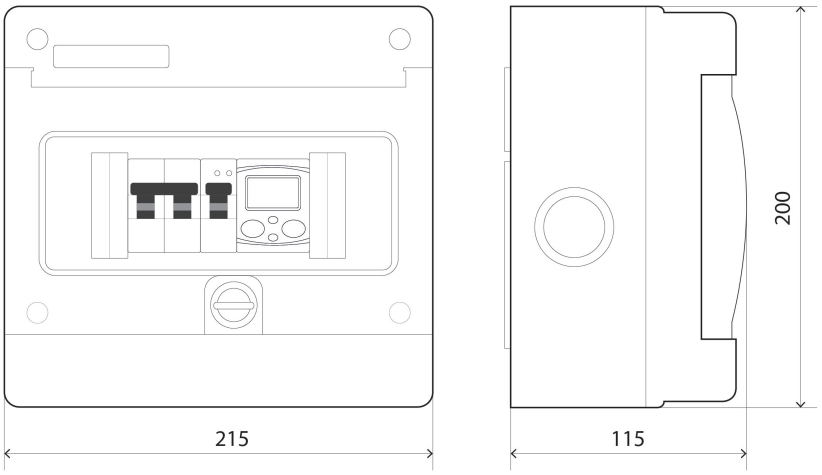

Creation date: 27/11/2026 - CIRCUTOR, SAU reserves the right to make technical changes or modify the content/images of this document without prior notice, in order to improve its reliability, functionality, design or for other reasons.
It accepts no liability for any errors, inaccuracies or possible lack of information in this document.