,

Code:

Description

With a modern and minimalist design, the new **eNext** range is the best indoor charging option. It features an intuitive app for monitoring the charge, setting up the device, activating the charge remotely, scheduling the charge based on hourly energy rates, diagnostics and firmware updates.

Thanks to its compatibility with the **CirBEON** device, which manages the current supplied to the vehicle based to the power available, the **eNext** charger is ideal for the domestic sector.

Application

These devices are specially designed to be installed in covered parking spaces, which can be used for parking vehicles of any type (cars, motorcycles, bicycles, transportation, cleaning, etc.).

Creation date: 23/11/2026 - CIRCUTOR, SAU reserves the right to make technical changes or modify the content/images of this document without prior notice, in order to improve its reliability, functionality, design or for other reasons.
It accepts no liability for any errors, inaccuracies or possible lack of information in this document.



Code:

Specifications

AC power supply

Input intensity	32A
Frequency	50 ... 60 Hz
Type of network	3Ph + N + GND
Nominal voltage	400 V ~ (± 10 %)

Electrical characteristics

Cable: Connector type	Type 2 cable
Max. output intensity (A)	32
Charging mode	Mode 3 (according to IEC 61851-1)
No. of charges	1
Max. output power (kW)	22
Voltage	400 V ~ (± 10 %)

Mechanical characteristics

Size (mm) width x height x depth	335 x 315 x 179.7 (mm)
Envelope	Self-extinguishing ABS / PC
Fastening	Vertical, 3 points for wall mounting
Weight (kg)	4,4

Environmental characteristics

Protection class	IP 54 / IK10
Relative humidity (without condensation)	5 ... 95 %
Storage temperature	-40 ... +60 °C
Working temperature	-5 ... +45 °C

User interface

LED	RGB color charge indicator

Standards

Standards	IEC 61851-1, IEC 62196-1, IEC 62196-2, 2014/35/UE, LVD;2014/30/UE

Features / performance

Heating and air conditioning unit	-30 ... +45 °C (Opcional)
Optional	Leakage detector (MCB/RCBO with trigger coil is required to open the circuit) RCBO: RCD Type A (S) + MCB (S) - includes trigger coil MCB (Curve C) - includes trigger coil Transient surge protector IEC 61643-1 (Class I)

Output 1

Maximum current	32 A
Maximum power	22 kW



Code:

Voltage range	400 Vca
Connector type	Type 2 cable
Network type	Three-phase (AC)

Wireless communication

Technology / Type	Short range wireless technology

End-of-charge light, Compatible with CirBEON sensor, wireless communications, app to monitor and set up the device, Weight: 4 kg, ABS/PC enclosure - IP54 - IK10, Dimensions 180x335x315 mm. 5-m cable length, cable holder included (depending on model)

Creation date: 23/11/2026 - CIRCUTOR, SAU reserves the right to make technical changes or modify the content/images of this document without prior notice, in order to improve its reliability, functionality, design or for other reasons.
It accepts no liability for any errors, inaccuracies or possible lack of information in this document.



Code:

Dimensions

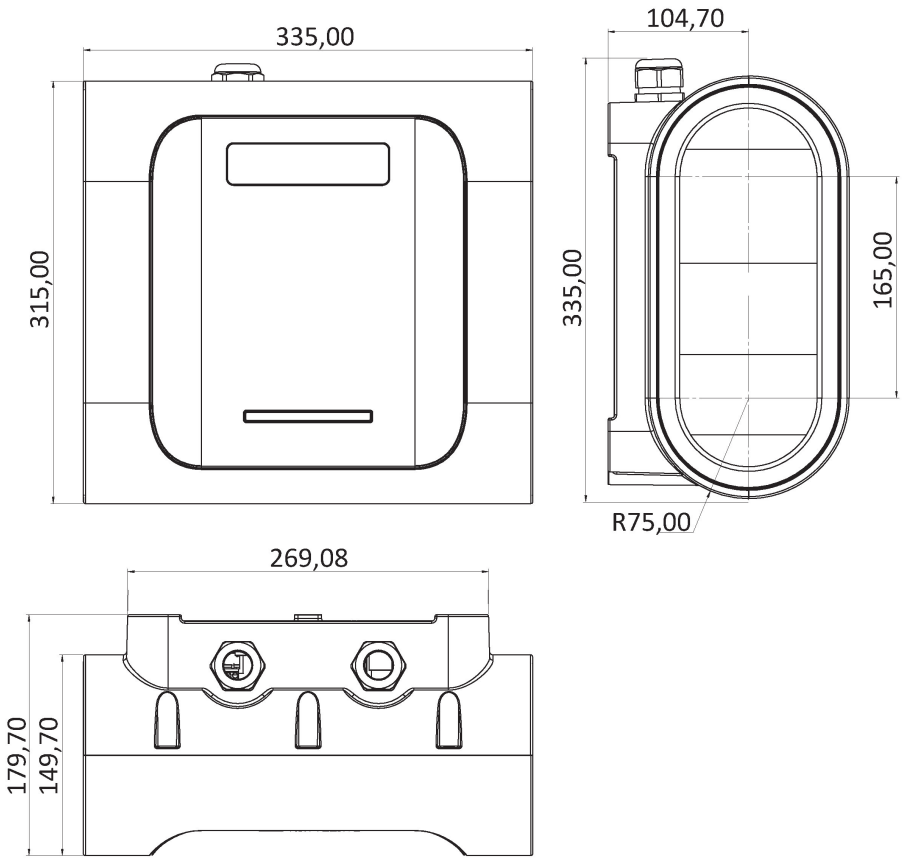

Creation date: 23/11/2026 - CIRCUTOR, SAU reserves the right to make technical changes or modify the content/images of this document without prior notice, in order to improve its reliability, functionality, design or for other reasons.
It accepts no liability for any errors, inaccuracies or possible lack of information in this document.