,

Code:

Description

Designed to be easily installed in both indoor and outdoor private parking spaces, and to be distributed to electric vehicle manufacturers. The eHome range has been optimised to offer the best cost/quality ratio on the market. As a result, we offer a high quality product that can comfortably charge all the electrical vehicle brands on the market in Mode 3 with a Type 1 or Type 2 connector.

Thanks to its compatibility with the **CirBEON-63** device, which manages the current supplied to the vehicle based to the power available, the **eHome** charger is ideal for the domestic sector.

Application

Its application focuses on home use, since it is easy to install and comes in a small size.

Creation date: 23/11/2026 - CIRCUTOR, SAU reserves the right to make technical changes or modify the content/images of this document without prior notice, in order to improve its reliability, functionality, design or for other reasons.
It accepts no liability for any errors, inaccuracies or possible lack of information in this document.



Code:

Specifications

AC power supply

Input intensity	16A
Frequency	50 / 60 Hz
Type of network	3Ph + N + GND
Nominal voltage	400 V ~ (± 10 %)

Electrical characteristics

Cable: Connector type	Type 2 cable
Max. output intensity (A)	16
Charging mode	Mode 3
No. of charges	1
Max. output power (kW)	11
Voltage	400 V ~ (± 10 %)

Mechanical characteristics

Size (mm) width x height x depth	180 x 315 x 115 (mm)
Envelope	Self-extinguishing ABS-PCV0 plastic
Fastening	Wall mounting, 3-point wall anchorage
Weight (kg)	4

Environmental characteristics

Protection class	IP 54 / IK 10
Relative humidity (without condensation)	5% ... 95%
Storage temperature	-40°C ... +60°C
Working temperature	-5°C ... +45°C

User interface

LED	Charge indicator

Standards

Standards	IEC 61851-1, IEC 61851-22, IEC 62196-1, IEC 62196-2, Directiva 2014/35/UE, LVD; 2014/30/UE, EMC

Features / performance

Heating and air conditioning unit	-30 ... +45 °C (Opcional)

Output 1

Maximum current	16 A
Maximum power	11 kW
Voltage range	400 Vac
Connector type	Type 2 cable

Creation date: 23/11/2026 - CIRCUTOR, SAU reserves the right to make technical changes or modify the content/images of this document without prior notice, in order to improve its reliability, functionality, design or for other reasons.
It accepts no liability for any errors, inaccuracies or possible lack of information in this document.



Code:

Network type	Three-phase (AC)

eHome

Home charging stations

CODE	TYPE	Output type	Connector type	Grid type
V25030.	eHome T2C32	230 Vac- 32 A - 7,4 kW	Type 2 cable	Single-phase
V25070.	eHome T2S32	230 Vac- 32 A - 7,4 kW	Type 2 socket	Single-phase
V25090.	eHome T2C16 TRI	400 Vac - 16 A - 11 kW	Type 2 cable	Three-phase
V25080.	eHome T2S16 TRI	400 Vac - 16 A - 11 kW	Type 2 socket	Three-phase

End-of-charge light, Compatible with CirBEON-63 sensor, ABS-PVC0 self-extinguishing plastic housing - IP54 - IK10, Aprox. weight: 3 kg, Dimensions 180x315x115 mm. 5-m cable length, cable holder included (depending on model).

Creation date: 23/11/2026 - CIRCUTOR, SAU reserves the right to make technical changes or modify the content/images of this document without prior notice, in order to improve its reliability, functionality, design or for other reasons.
It accepts no liability for any errors, inaccuracies or possible lack of information in this document.



Code:

Dimensions

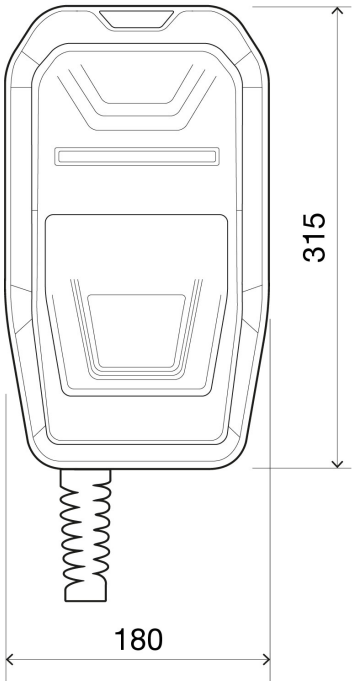

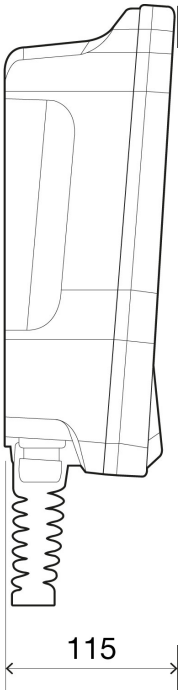

Connections

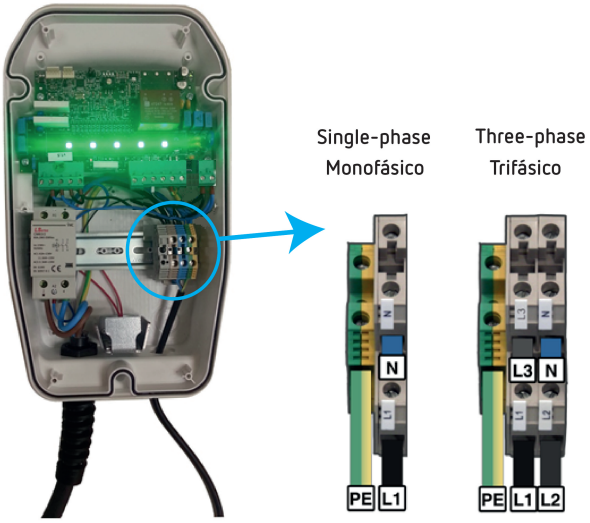

Creation date: 23/11/2026 - CIRCUTOR, SAU reserves the right to make technical changes or modify the content/images of this document without prior notice, in order to improve its reliability, functionality, design or for other reasons.
It accepts no liability for any errors, inaccuracies or possible lack of information in this document.