

eHome T2S32

eHome T2S32, Car park wall box

Code: V25070.

> Output type: 230 Vac- 32 A - 7,4 kW
> Input current: 32 A
> Connector type: Type 2 socket
> Grid type: Single-phase
> Charge mode: 3
> No. Sockets: 1

Description

Designed to be easily installed in both indoor and outdoor private parking spaces, and to be distributed to electric vehicle manufacturers. The eHome range has been optimised to offer the best cost/quality ratio on the market. As a result, we offer a high quality product that can comfortably charge all the electrical vehicle brands on the market in Mode 3 with a Type 1 or Type 2 connector.

Thanks to its compatibility with the **CirBEON-63** device, which manages the current supplied to the vehicle based to the power available, the **eHome** charger is ideal for the domestic sector.

Application

Its application focuses on home use, since it is easy to install and comes in a small size.

Creation date: 23/11/2026 - CIRCUTOR, SAU reserves the right to make technical changes or modify the content/images of this document without prior notice, in order to improve its reliability, functionality, design or for other reasons.
It accepts no liability for any errors, inaccuracies or possible lack of information in this document.



eHome T2S32

Basic charging wallbox

Code: V25070.

Specifications

AC power supply

Input intensity	32A
Frequency	50 / 60 Hz
Type of network	1Ph + N + GND
Nominal voltage	230 V ~ (± 10 %)

Electrical characteristics

Cable: Connector type	Type 2 socket
Max. output intensity (A)	32
Charging mode	Mode 3
No. of charges	1
Max. output power (kW)	7,4
Voltage	230 V ~ (± 10 %)

Mechanical characteristics

Size (mm) width x height x depth	180 x 315 x 115 (mm)
Envelope	Self-extinguishing ABS-PCV0 plastic
Fastening	Wall mounting, 3-point wall anchorage
Weight (kg)	0,22

Environmental characteristics

Protection class	IP 54 / IK 10
Relative humidity (without condensation)	5% ... 95%
Storage temperature	-40 ... +60 °C
Working temperature	-5 ... +45 °C

User interface

LED	Charge indicator

Standards

Standards	IEC 61851-1, IEC 61851-22, IEC 62196-1, IEC 62196-2, Directiva 2014/35/UE, LVD; 2014/30/UE, EMC

Features / performance

Heating and air conditioning unit	-30 ... +45 °C (Opcional)

Output 1

Maximum current	32 A
Maximum power	7,4 kW



eHome T2S32

Basic charging wallbox

Code: V25070.

Voltage range	230 Vca
Connector type	Type 2 socket
Network type	Single-phase (AC)

eHome
Home charging stations

CODE	TYPE	Output type	Connector type	Grid type
V25030.	eHome T2C32	230 Vac- 32 A - 7,4 kW	Type 2 cable	Single-phase
V25070.	eHome T2S32	230 Vac- 32 A - 7,4 kW	Type 2 socket	Single-phase
V25090.	eHome T2C16 TRI	400 Vac - 16 A - 11 kW	Type 2 cable	Three-phase
V25080.	eHome T2S16 TRI	400 Vac - 16 A - 11 kW	Type 2 socket	Three-phase

End-of-charge light, Compatible with CirBEON-63 sensor, ABS-PVC0 self-extinguishing plastic housing - IP54 - IK10, Aprox. weight: 3 kg, Dimensions 180x315x115 mm. 5-m cable length, cable holder included (depending on model).

Creation date: 23/11/2026 - CIRCUTOR, SAU reserves the right to make technical changes or modify the content/images of this document without prior notice, in order to improve its reliability, functionality, design or for other reasons.
It accepts no liability for any errors, inaccuracies or possible lack of information in this document.



eHome T2S32

Basic charging wallbox

Code: V25070.

Dimensions

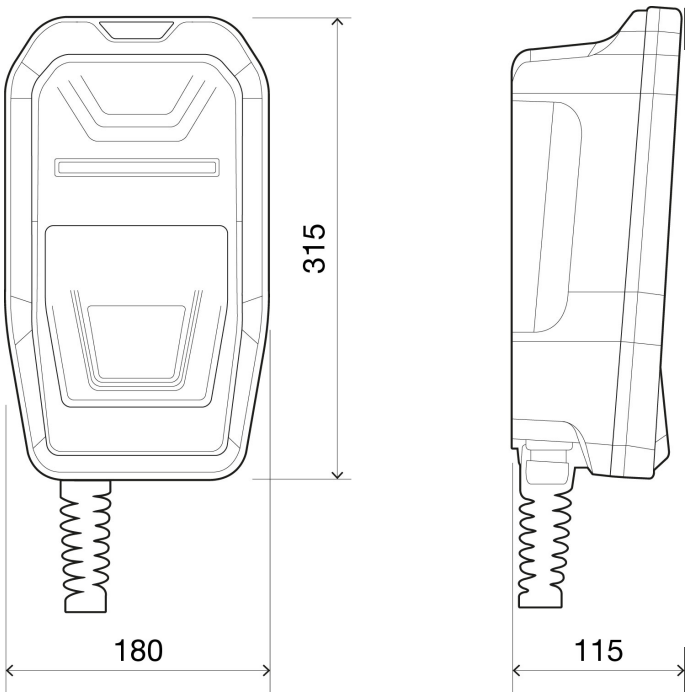

Connections

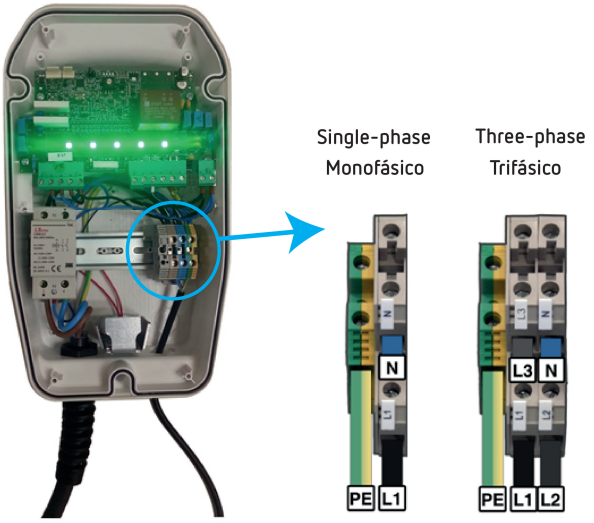

Creation date: 23/11/2026 - CIRCUTOR, SAU reserves the right to make technical changes or modify the content/images of this document without prior notice, in order to improve its reliability, functionality, design or for other reasons.
It accepts no liability for any errors, inaccuracies or possible lack of information in this document.