

RAPTION 160C CCS2-CHA 5M-CM

RAPTION 160C CCS2-CHA 5M-CM, Compact outdoor fast charging station

Code: V17B16.

> Cable (m): 5.5
> Communications: Ethernet | 2xSIM 4G | Wi-Fi | GPRS | GSM
> Output type: 150-920 Vcc - 500 A - 160 kW | 150-500 Vcc - 125 A - 62,5 kW
> Connector type: CCS Combo 2 (FF) | JEVS G105 - CHAdeMO (AA)
> Grid type: Three-phase
> Charge mode: 4
> No. Sockets: 2
> Cable manegement: 1

Description

The **RAPTION 160C** is an ultra-fast charging station for electric vehicles that significantly reduces the charging time in short-term car parks, offering EV drivers a charging experience similar to that of traditional internal combustion vehicles. This model has a charging capacity of 160 kW (500 A) in Boost mode, regardless of the battery's working voltage. It also allows charging two EVs simultaneously by offering 80 kW per connector, which provides flexibility and adaptability to the charging needs of both current and future vehicles, thus anticipating market demands.

In addition to its high charging power, the device offers an excellent user experience with a design intended to help people with reduced mobility, thanks to the height of the elements and to the vehicle connection system. It has a 15" anti-vandalism touchscreen that provides a very intuitive interface to interact with the device. It also has LED indicators for the charging status, courtesy lights and the option to install a cable management system, which makes it easier to connect the vehicle charging cables. It also features a contactless payment terminal.

Like all models in the **RAPTION** range, the **RAPTION 160C** is compatible with our dynamic power management system (DLM) to regulate the charge without exceeding the contracted power of the installation. The device has an **OCPP** communication protocol to integrate it with management platforms. It can also be configured as a Master in Master-Slave solutions.

Application

The **RAPTION 160C** is designed for situations that require charging electric vehicles in a short time, such as service stations, rest areas on motorways, as well as in settings where we fast charging solutions are desired, such as designated charging spaces in shopping centres, charging hubs, fleets of professional vehicles, charging trucks and fleets of urban buses, etc.



RAPTION 160C CCS2-CHA 5M-CM

Quick outdoor charging station

Code: V17B16.

Specifications

AC power supply

Consumption	172 kVA
Input intensity	276 A
Power factor	> 0,99
Frequency	50 / 60 Hz
Type of network	3P + N + PE
Nominal voltage	400 V ~ (± 10 %)

Electrical characteristics

Charging mode	Mode 4
No. of charges	2
Efficiency	96%

Mechanical characteristics

Size (mm) width x height x depth	1365 x 2050 x 635 (mm)
Envelope	Stainless steel
Thermal management	Air cooling fans
Noise	< 70 dB
Fastening	Ground
Weight (kg)	575

Environmental characteristics

Protection class	IP 54 / IK10
Relative humidity (without condensation)	5 ... 95 %
Storage temperature	-40 ... +60 °C
Working temperature	-30 ... +50 °C

Communication Network

Protocol	OCPP 1.6J / 2.0 HW Ready
Technology / Interface	Ethernet 10/100 Base TX (TCP/IP)

User interface

RFID (Radio-Frequency Identification)	NFC, ISO/IEC 14443A (MIFARE Classic, MIFARE DESFire EV1)
LED	Charging indicator and courtesy lighting
Display type	15" TFT touchscreen anti-vandalism display

Standards

Standards	IEC 61851-1, IEC 61851-23, IEC 61851-21-2, IEC 61851-24, IEC 62196-1, IEC 62196-2, IEC 62196-3, Compatible with CHAdeMO, Meets the CCS specification, DIN

Creation date: 25/11/2026 - CIRCUTOR, SAU reserves the right to make technical changes or modify the content/images of this document without prior notice, in order to improve its reliability, functionality, design or for other reasons.
It accepts no liability for any errors, inaccuracies or possible lack of information in this document.



RAPTION 160C CCS2-CHA 5M-CM

Quick outdoor charging station

Code: V17B16.

	70121. ISO 15118 ready, Directives: 2014/53/EU, 2014/30/EU, 2014/35/EU, Modem 4G complies with CE/RED, Compliant with RoHS 2011/65/EU-2017/2102, Meter complies with 2014/32/EU

Features / performance

Components	Cable management
Energy measurement	MID Class 1 Meter, EN 50470-3
Optional	4-pole transient overvoltages (IEC 61643-11 Class II) Local Payment Terminal - Ingenico Self2000 (Redsys) Local/Cloud Payment Terminal - Payter Apollo Cloud Payment Terminal - PAX IM30 Cloud Payment Terminal - Castles S1U2 Compatibility extension RFID Legic: NFC, ISO/IEC 14443A/B, ISO/IEC 15693, ISO/IEC 18092, (Legic Advant, Legic Prime, Sony FeliCA, Calypso) MCCB in power supply

Protection

Element	Isolation monitoring device Magneto-thermal: tripping curve C

Radio communication

Technology / Type	4G / GPRS / GSM Modem

Output 1

Maximum current	500 A
Maximum power	160 kW
Voltage range	150-920 Vcc
Connector type	CCS Combo 2 (FF) (Cable length 5,5m)
Network type	DC

Output 2

Maximum current	125 A
Maximum power	62,5 kW
Voltage range	150...500 Vcc
Connector type	CHAdeMO (AA) (Cable length 5,5m)
Network type	DC

RAPTION 160C

160-kW compact, fast-charging stations

CODE	TYPE	No. Sockets	Output type	Connector type	Cable manegement	Connector lock	Cable (m)
V17B20.	RAPTION 160C CCS2	1	150-920 Vcc - 500 A - 160 kW	CCS Combo 2 (FF)	0	0	4

Creation date: 25/11/2026 - CIRCUTOR, SAU reserves the right to make technical changes or modify the content/images of this document without prior notice, in order to improve its reliability, functionality, design or for other reasons.
It accepts no liability for any errors, inaccuracies or possible lack of information in this document.



RAPTION 160C CCS2-CHA 5M-CM

Quick outdoor charging station

Code: V17B16.

CODE	TYPE	No. Sockets	Output type	Connector type	Cable manegement	Connector lock	Cable (m)
V17B21.	RAPTION 160C CCS2 BC	1	150-920 Vcc - 500 A - 160 kW	CCS Combo 2 (FF)	0	1	4
V17B22.	RAPTION 160C CCS2 5M	1	150-920 Vcc - 500 A - 160 kW	CCS Combo 2 (FF)	0	0	5.5
V17B23.	RAPTION 160C CCS2 BC-5M	1	150-920 Vcc - 500 A - 160 kW	CCS Combo 2 (FF)	0	1	5.5
V17B26.	RAPTION 160C CCS2 5M-CM	1	150-920 Vcc - 500 A - 160 kW	CCS Combo 2 (FF)	1	0	5.5
V17B27.	RAPTION 160C CCS2 BC-5M-CM	1	150-920 Vcc - 500 A - 160 kW	CCS Combo 2 (FF)	1	1	5.5
V17B00.	RAPTION 160C CCS2-CCS2	2	150-920 Vcc - 500 A - 160 kW | 150-920 Vcc - 500 A - 160 kW	CCS Combo 2 (FF) | CCS Combo 2 (FF)	0	0	4
V17B01.	RAPTION 160C CCS2-CCS2 BC	2	150-920 Vcc - 500 A - 160 kW | 150-920 Vcc - 500 A - 160 kW	CCS Combo 2 (FF) | CCS Combo 2 (FF)	0	1	4
V17B02.	RAPTION 160C CCS2-CCS2 5M	2	150-920 Vcc - 500 A - 160 kW | 150-920 Vcc - 500 A - 160 kW	CCS Combo 2 (FF) | CCS Combo 2 (FF)	0	0	5.5
V17B03.	RAPTION 160C CCS2-CCS2 BC-5M	2	150-920 Vcc - 500 A - 160 kW | 150-920 Vcc - 500 A - 160 kW	CCS Combo 2 (FF) | CCS Combo 2 (FF)	0	1	5.5
V17B06.	RAPTION 160C CCS2-CCS2 5M-CM	2	150-920 Vcc - 500 A - 160 kW | 150-920 Vcc - 500 A - 160 kW	CCS Combo 2 (FF) | CCS Combo 2 (FF)	1	0	5.5
V17B07.	RAPTION 160C CCS2-CCS2 BC-5M-CM	2	150-920 Vcc - 500 A - 160 kW | 150-920 Vcc - 500 A - 160 kW	CCS Combo 2 (FF) | CCS Combo 2 (FF)	1	1	5.5
V17B10.	RAPTION 160C CCS2-CHA	2	150-920 Vcc - 500 A - 160 kW | 150-500 Vcc - 200 A - 100 kW	CCS Combo 2 (FF) | JEVS G105 - CHAdeMO (AA)	0	0	4
V17B11.	RAPTION 160C CCS2-CHA BC	2	150-920 Vcc - 500 A - 160 kW | 150-500 Vcc - 200 A - 100 kW	CCS Combo 2 (FF) | JEVS G105 - CHAdeMO (AA)	0	1	4
V17B12.	RAPTION 160C CCS2-CHA 5M	2	150-920 Vcc - 500 A - 160 kW | 150-500 Vcc - 125 A - 62,5 kW	CCS Combo 2 (FF) | JEVS G105 - CHAdeMO (AA)	0	0	5.5
V17B13.	RAPTION 160C CCS2-CHA BC-5M	2	150-920 Vcc - 500 A - 160 kW | 150-500 Vcc - 125 A - 62,5 kW	CCS Combo 2 (FF) | JEVS G105 - CHAdeMO (AA)	0	1	5.5
V17B16.	RAPTION 160C CCS2-CHA 5M-CM	2	150-920 Vcc - 500 A - 160 kW | 150-500 Vcc - 125 A - 62,5 kW	CCS Combo 2 (FF) | JEVS G105 - CHAdeMO (AA)	1	0	5.5
V17B17.	RAPTION 160C CCS2-CHA BC-5M-CM	2	150-920 Vcc - 500 A - 160 kW | 150-500 Vcc - 125 A - 62,5 kW	CCS Combo 2 (FF) | JEVS G105 - CHAdeMO (AA)	1	1	5.5

15" color TFT touch screen vandal resistant, magnetothermal protection with C trip curve. Insulation monitoring device, integrated MID energy measurement, RFID reader for identification and activation recharge. Data storage, Ethernet communications, 4G dual modem communications, OCPP 1.6J/2.0 HW ready communications protocol. Approx. weight: 575 kg. IP54 stainless steel enclosure - IK10. Dimensions: 1235x1910x635 mm (without cable). Cable lengths 4 m or 5.5 m (depending on the RAPTION xxxC model ... -CM)

Creation date: 25/11/2026 - CIRCUTOR, SAU reserves the right to make technical changes or modify the content/images of this document without prior notice, in order to improve its reliability, functionality, design or for other reasons.
It accepts no liability for any errors, inaccuracies or possible lack of information in this document.



RAPTION 160C CCS2-CHA 5M-CM

Quick outdoor charging station

Code: V17B16.

Dimensions

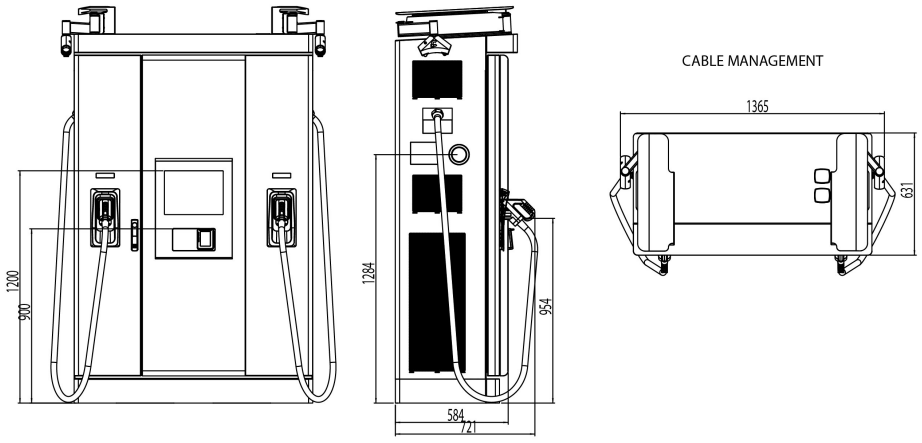

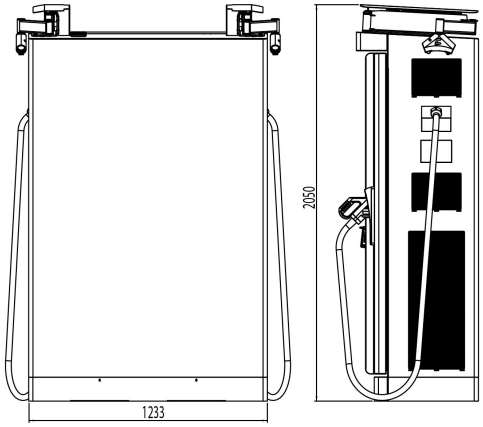

Creation date: 25/11/2026 - CIRCUTOR, SAU reserves the right to make technical changes or modify the content/images of this document without prior notice, in order to improve its reliability, functionality, design or for other reasons.
It accepts no liability for any errors, inaccuracies or possible lack of information in this document.