

RAPTION 80C CCS2-CCS2

RAPTION 80C CCS2-CCS2, Compact outdoor fast charging station

Code: V17A00.

> Cable (m): 4
> Communications: Ethernet | 2xSIM 4G | Wi-Fi | GPRS | GSM
> Output type: 150-920 Vcc - 266 A - 80 kW | 150-920 Vcc - 266 A - 80 kW
> Connector type: CCS Combo 2 (FF) | CCS Combo 2 (FF)
> Grid type: Three-phase
> Charge mode: 4
> No. Sockets: 2
> Cable manegement: 0
> Connector lock: 0

Description

The **RAPTION 80C** is a fast charging station for electric vehicles that significantly reduces charging times in short-term car parks. This model has a charging capacity of 80 kW (266 A) in Boost mode, regardless of the battery's working voltage. It also allows charging two EVs simultaneously by offering 40 kW per connector, which provides flexibility and adaptability to the charging needs of both current and future vehicles, thus anticipating market demands.

In addition to its high charging power, the device offers an excellent user experience with a design intended to help people with reduced mobility, thanks to the height of the elements and to the vehicle connection system. It has a 15" anti-vandalism touchscreen that provides a very intuitive interface to interact with the device. It also has LED indicators for the charging status, courtesy lights and the option to install a cable management system, which makes it easier to connect the vehicle charging cables. It also features a contactless payment terminal.

Like all models in the **RAPTION** range, the **RAPTION 80C** is compatible with our dynamic power management system (DLM) to regulate the charge without exceeding the contracted power of the installation. The device has an OCPP communication protocol to integrate it with management platforms. It can also be configured as a Master in Master-Slave solutions

Application

The **RAPTION 80C** is designed for situations that require charging electric vehicles in a short time, such as service stations, rest areas on motorways, as well as in settings where we fast charging solutions are desired, such as designated charging spaces in shopping centres, charging hubs, fleets of professional vehicles, etc.

Creation date: 23/11/2026 - CIRCUTOR, SAU reserves the right to make technical changes or modify the content/images of this document without prior notice, in order to improve its reliability, functionality, design or for other reasons.
It accepts no liability for any errors, inaccuracies or possible lack of information in this document.



RAPTION 80C CCS2-CCS2

Quick outdoor charging station

Code: V17A00.

Specifications

AC power supply

Consumption	86 kVA
Input intensity	142 A
Power factor	> 0,99
Frequency	50 / 60 Hz
Type of network	3P + N + PE
Nominal voltage	400 V ~ (± 10 %)

Electrical characteristics

Charging mode	Mode 4
No. of charges	2
Efficiency	96%

Mechanical characteristics

Size (mm) width x height x depth	990 x 1810 x 425 (mm)
Envelope	Stainless steel
Thermal management	Air cooling fans
Noise	< 65 dB
Fastening	Ground
Weight (kg)	300

Environmental characteristics

Protection class	IP 54 / IK10
Relative humidity (without condensation)	5 ... 95 %
Storage temperature	-40 ... +60 °C
Working temperature	-30 ... +50 °C

Communication Network

Protocol	OCPP 1.6J / 2.0 HW Ready
Technology / Interface	Ethernet 10/100 Base TX (TCP/IP)

User interface

RFID (Radio-Frequency Identification)	NFC, ISO/IEC 14443A (MIFARE Classic, MIFARE DESFire EV1)
LED	Charging indicator and courtesy lighting
Display type	15" TFT touchscreen anti-vandalism display

Standards

Standards	IEC 61851-1; IEC 61851-23; IEC 61851-21-2; CCS (DIN 70121;ISO 15118); EN 18031-1:2024

Creation date: 23/11/2026 - CIRCUTOR, SAU reserves the right to make technical changes or modify the content/images of this document without prior notice, in order to improve its reliability, functionality, design or for other reasons.
It accepts no liability for any errors, inaccuracies or possible lack of information in this document.



RAPTION 80C CCS2-CCS2

Quick outdoor charging station

Code: V17A00.

Features / performance

Energy measurement	MID Class 1 Meter, EN 50470-3
Optional	4-pole transient overvoltages (IEC 61643-11 Class II) Local Payment Terminal - Ingenico Self2000 (Redsys) Local/Cloud Payment Terminal - Payter Apollo Cloud Payment Terminal - PAX IM30 Cloud Payment Terminal - Castles S1U2 Compatibility extension RFID Legic: NFC, ISO/IEC 14443A/B, ISO/IEC 15693, ISO/IEC 18092, (Legic Advant, Legic Prime, Sony FeliCA, Calypso) MCCB in power supply

Protection

Element	Isolation monitoring device Magneto-thermal: tripping curve C

Radio communication

Technology / Type	4G / GPRS / GSM Modem

Output 1

Maximum current	266 A
Maximum power	80 kW
Voltage range	150-920 Vcc
Connector type	CCS Combo 2 (FF) (Cable length 4m)
Network type	DC

Output 2

Maximum current	266 A
Maximum power	80 kW
Voltage range	150-920 Vcc
Connector type	CCS Combo 2 (FF) (Cable length 4m)
Network type	DC

RAPTION 80C
80-kW compact, fast-charging stations

CODE	TYPE	No. Sockets	Output type	Connector type	Cable manegement	Connector lock	Cable (m)
V17A20.	RAPTION 80C CCS2	1	150-920 Vcc - 266 A - 80 kW	CCS Combo 2 (FF)	0	0	4
V17A21.	RAPTION 80C CCS2 BC	1	150-920 Vcc - 266 A - 80 kW	CCS Combo 2 (FF)	0	1	4
V17A22.	RAPTION 80C CCS2 5M	1	150-920 Vcc - 266 A - 80 kW	CCS Combo 2 (FF)	0	0	5.5
V17A23.	RAPTION 80C CCS2 BC-5M	1	150-920 Vcc - 266 A - 80 kW	CCS Combo 2 (FF)	0	1	5.5
V17A26.	RAPTION 80C CCS2 5M-CM	1	150-920 Vcc - 266 A - 80 kW	CCS Combo 2 (FF)	1	0	5.5
V17A27.	RAPTION 80C CCS2 BC-5M-CM	1	150-920 Vcc - 266 A - 80 kW	CCS Combo 2 (FF)	1	1	5.5



RAPTION 80C CCS2-CCS2

Quick outdoor charging station

Code: V17A00.

CODE	TYPE	No. Sockets	Output type	Connector type	Cable manegement	Connector lock	Cable (m)
V17A00.	RAPTION 80C CCS2-CCS2	2	150-920 Vcc - 266 A - 80 kW | 150-920 Vcc - 266 A - 80 kW	CCS Combo 2 (FF) | CCS Combo 2 (FF)	0	0	4
V17A01.	RAPTION 80C CCS2-CCS2 BC	2	150-920 Vcc - 266 A - 80 kW | 150-920 Vcc - 266 A - 80 kW	CCS Combo 2 (FF) | CCS Combo 2 (FF)	0	1	4
V17A02.	RAPTION 80C CCS2-CCS2 5M	2	150-920 Vcc - 266 A - 80 kW | 150-920 Vcc - 266 A - 80 kW	CCS Combo 2 (FF) | CCS Combo 2 (FF)	0	0	5.5
V17A03.	RAPTION 80C CCS2-CCS2 BC-5M	2	150-920 Vcc - 266 A - 80 kW | 150-920 Vcc - 266 A - 80 kW	CCS Combo 2 (FF) | CCS Combo 2 (FF)	0	1	5.5
V17A06.	RAPTION 80C CCS2-CCS2 5M-CM	2	150-920 Vcc - 266 A - 80 kW |150-920 Vcc - 266 A - 80 kW	CCS Combo 2 (FF) |CCS Combo 2 (FF)	1	0	5.5
V17A07.	RAPTION 80C CCS2-CCS2 BC-5M-CM	2	150-920 Vcc - 266 A - 80 kW |150-920 Vcc - 266 A - 80 kW	CCS Combo 2 (FF) | CCS Combo 2 (FF)	1	1	5.5
V17A10.	RAPTION 80C CCS2-CHA	2	150-920 Vcc - 266 A - 80 kW | 150-500 Vcc - 200 A - 80 kW	CCS Combo 2 (FF) |JEVS G105 - CHAdeMO (AA)	0	0	4
V17A11.	RAPTION 80C CCS2-CHA BC	2	150-920 Vcc - 266 A - 80 kW | 150-500 Vcc - 200 A - 80 kW	CCS Combo 2 (FF) | JEVS G105 - CHAdeMO (AA)	0	1	4
V17A12.	RAPTION 80C CCS2-CHA 5M	2	150-920 Vcc - 266 A - 80 kW | 150-500 Vcc - 125 A - 62,5 kW	CCS Combo 2 (FF) | JEVS G105 - CHAdeMO (AA)	0	0	5.5
V17A13.	RAPTION 80C CCS2-CHA BC-5M	2	150-920 Vcc - 266 A - 80 kW | 150-500 Vcc - 125 A - 62,5 kW	CCS Combo 2 (FF) | JEVS G105 - CHAdeMO (AA)	0	1	5.5
V17A16.	RAPTION 80C CCS2-CHA 5M-CM	2	150-920 Vcc - 266 A - 80 kW | 150-500 Vcc - 125 A - 62,5 kW	CCS Combo 2 (FF) | JEVS G105 - CHAdeMO (AA)	1	0	5.5
V17A17.	RAPTION 80C CCS2-CHA BC-5M-CM	2	150-920 Vcc - 266 A - 80 kW | 150-500 Vcc - 125 A - 62,5 kW	CCS Combo 2 (FF) | JEVS G105 - CHAdeMO (AA)	1	1	5.5

15" color TFT touch screen vandal resistant, magnetothermal protection with C trip curve. Insulation monitoring device. Integrated MID energy measurement. RFID reader for identification and activation recharge. Data storage, Ethernet communications, dual 4G modem communications; OCPP 1.6J/2.0 HW ready communications protocol. Approx. weight: 300 kg. IP54 stainless steel enclosure - IK10. Dimensions: 990 x 1810 x 425 mm (without cable). Cable lengths 4 m or 5.5 m (depending on the RAPTION xxxC model ... -CM)

Creation date: 23/11/2026 - CIRCUTOR, SAU reserves the right to make technical changes or modify the content/images of this document without prior notice, in order to improve its reliability, functionality, design or for other reasons.
It accepts no liability for any errors, inaccuracies or possible lack of information in this document.



RAPTION 80C CCS2-CCS2

Quick outdoor charging station

Code: V17A00.

Dimensions

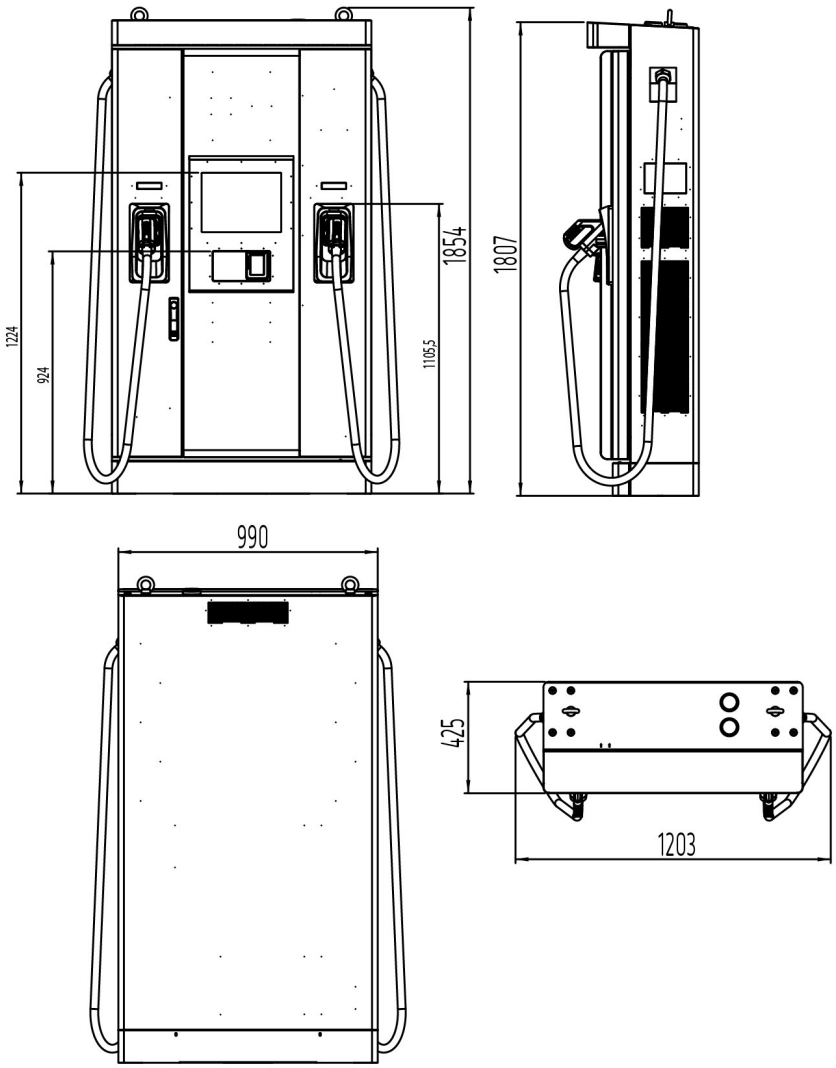

Creation date: 23/11/2026 - CIRCUTOR, SAU reserves the right to make technical changes or modify the content/images of this document without prior notice, in order to improve its reliability, functionality, design or for other reasons.
It accepts no liability for any errors, inaccuracies or possible lack of information in this document.