

URBAN T24-MIX Gen4

URBAN T24-MIX Gen4, Outdoor recharge post

Code: V106C7.

> Communications: Ethernet | Wi-Fi
> Output type: 400 Vca - 32 A - 22 kW
> Input current: 64 A
> Connector type: Type 2 socket | Shucko
> Grid type: Three-phase
> Charge mode: 3
> No. Sockets: 4 (2)
> Earth leakage protection: Type A + 6 mAdc

Description

URBAN Gen4 pedestals are designed to provide a robust charging solution for public-access environments that is resistant to harsh environmental conditions and potential acts of vandalism. They are available in configurations with dual Type 2 cables or with Type 2 sockets and/or Schuko sockets in different combinations, enabling charging in Mode 1-2 and Mode 3 depending on the selected configuration. They also allow simultaneous charging, with one active socket on each side, in single-phase or three-phase installations. The connection sockets are positioned at an accessible height for people with reduced mobility, ensuring the usability of the charging point. In addition, they incorporate individual electrical protections per socket within an aluminium chassis, simplifying installation and maintenance and ensuring maximum safety.

The **URBAN Gen4** adds a 7" display and status LEDs; the display itself shows QR codes for authentication and diagnostics, reducing downtime and offering a multilingual experience.

They also integrate the OCPP protocol for easy connection to management platforms and are compatible with our dynamic load management (DLM) system, which adjusts charging without exceeding the contracted power.

Application

URBAN Gen4 pedestals are particularly suitable for all types of outdoor car parks. Applications range from public squares, department stores, airports, vehicle sales and rental companies, private car parks, etc.



URBAN T24-MIX Gen4

Outdoor charging posts

Code: V106C7.

Specifications

AC power supply

Input intensity	64 A
Frequency	50/60 Hz
Type of network	3Ph + N + GND
Nominal voltage	400 V ~ (± 10%)

Electrical characteristics

Charging mode	Mode 3 (IEC 61851-1)
No. of charges	4 (2)

Mechanical characteristics

Size (mm) width x height x depth	446 x 1544 x 288 (mm)
Envelope	Aluminio y ABS
Fastening	Fijación al suelo con 4 pernos
Weight (kg)	42

Environmental characteristics

Protection class	IP 55 / IK10
Relative humidity (without condensation)	5 ... 95 %
Storage temperature	-40 ... +60 °C
Working temperature	-5 ... +50 °C

Communication Network

Protocol	OCPP 1.6J / 2.0.1 HW Ready
Technology / Interface	Ethernet 10/100 Base TX (TCP/IP)

User interface

RFID (Radio-Frequency Identification)	ISO/IEC 14443 A/B, ISO 18092, NFC
LED	Indicador de carga en color RGB
Display type	7-inch screen

Standards

Standards	IEC 61851-1, IEC 61851-21-1, IEC 62196-1, IEC 62196-2, Directive 2014/35/UE, LVD; 2014/30/UE, EMC, EN 18031-1

Features / performance

Energy measurement	MID Class B meter, EN 50470-3
Optional	• 4G / GPRS Modem • Cloud Payment Terminal (Brand: Payter, Model: Apollo) • Differential Protection Type A (30 mA) + 6mA DC with automatic reconnection • Differential Protection Type B • Differential Protection Type B with automatic

Creation date: 25/11/2026 - CIRCUTOR, SAU reserves the right to make technical changes or modify the content/images of this document without prior notice, in order to improve its reliability, functionality, design or for other reasons.
It accepts no liability for any errors, inaccuracies or possible lack of information in this document.



URBAN T24-MIX Gen4

Outdoor charging posts

Code: V106C7.

reconnection• Transient Overvoltage Protector IEC 61643-1 (Class II)• Low Temperature Kit (-30 °C)

Protection

Element	- MCB (40A) Trip curve 'C' per outlet. - RCD Type A (30 mA) + 6mA DC per outlet.

Output 1

Maximum current	32 A / 16 A
Maximum power	22 kW / 3,7 kW
Voltage range	400 Vac / 230 Vac
Connector type	Base Tipo 2 / Schuko
Network type	Three-phase (AC)

Output 2

Maximum current	32 A / 16 A
Maximum power	22 kW / 3,7 kW
Voltage range	400 Vac / 230 Vac
Connector type	Base Tipo 2 / Schuko
Network type	Three-phase (AC)

Wireless communication

Band	2,4 GHz
Technology / Type	Wi-Fi

URBAN-Gen4

Intelligent charging poles

CODE	TYPE	No. Sockets	Output type	Connector type	Grid type	Earth leakage protection	Communications
URBAN Gen4							
V106C2.	URBAN M22 Gen4	2	230 Vca - 32 A - 7,4 kW	Type 2 socket	Single-phase	Type A + 6 mAdc	Ethernet | Wi-Fi
V106CA.	URBAN M22-C2 Gen4	2	230 Vca - 32 A - 7,4 kW	Cable Type 2	Single-phase	Type A + 6 mAdc	Ethernet | Wi-Fi
V106C3.	URBAN T22 Gen4	2	400 Vca - 32 A - 22 kW	Type 2 socket	Three-phase	Type A + 6 mAdc	Ethernet | Wi-Fi
V106C6.	URBAN T22-C2 Gen4	2	400 Vca - 32 A - 22 kW	Cable Type 2	Three-phase	Type A + 6 mAdc	Ethernet | Wi-Fi
V106C7.	URBAN T24-MIX Gen4	4 (2)	400 Vca - 32 A - 22 kW | 230Vca - 16 A - 3.7 kW	Type 2 socket | Schuko	Three-phase	Type A + 6 mAdc	Ethernet | Wi-Fi

Miniature Circuit Breaker and differential protection per socket. Integrated MID energy measurement, RFID reader for autentication and activation recharge. Data storage. Ethernet and Wi-Fi communications, 4G communications (optional), OCPP 1.6J and 2.0.1 HW Ready communications protocol, Weight aprox: 42 kg. Aluminum enclosure IP55 - IK10 for the Gen4 e models, IP54 - IK10 for the rest of the models. Dimensions 450x1550x290 mm. Cable length of 4 m (depending on model).

Creation date: 25/11/2026 - CIRCUTOR, SAU reserves the right to make technical changes or modify the content/images of this document without prior notice, in order to improve its reliability, functionality, design or for other reasons.
It accepts no liability for any errors, inaccuracies or possible lack of information in this document.



URBAN T24-MIX Gen4

Outdoor charging posts

Code: V106C7.

Dimensions

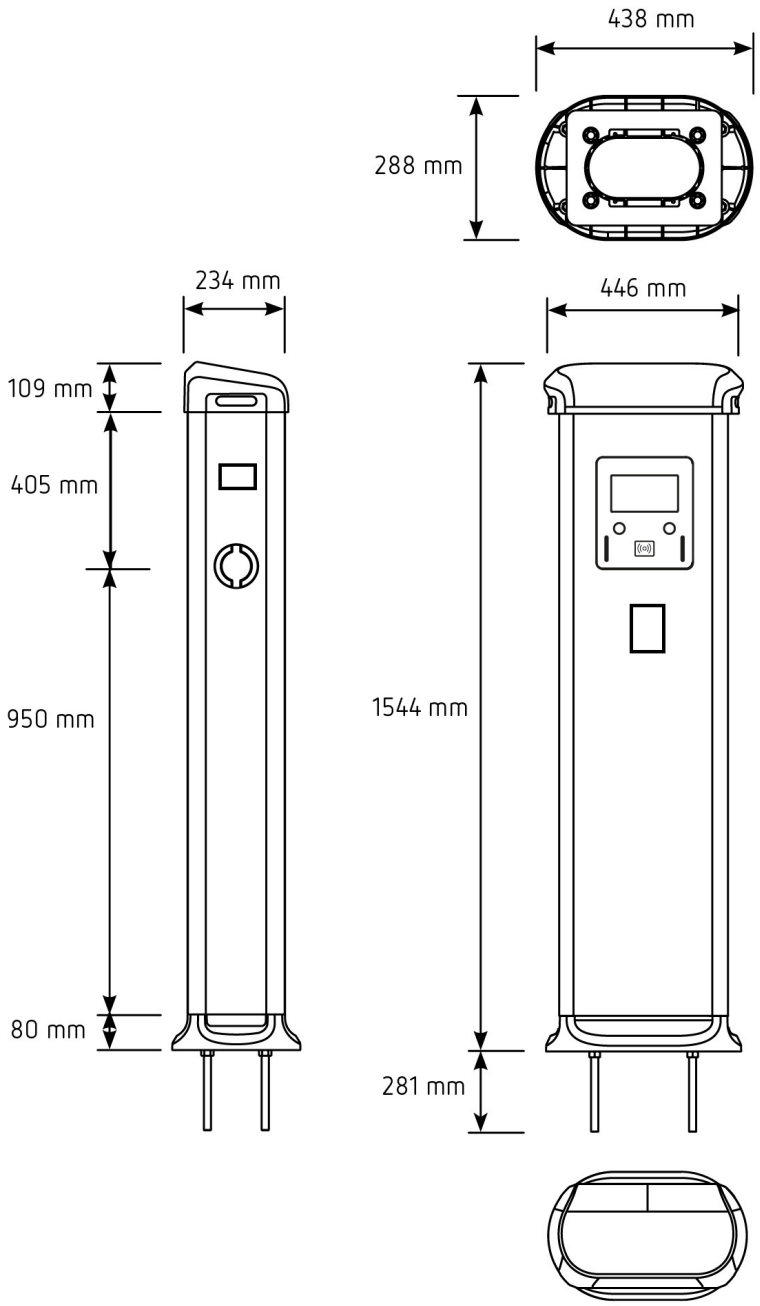

Creation date: 25/11/2026 - CIRCUTOR, SAU reserves the right to make technical changes or modify the content/images of this document without prior notice, in order to improve its reliability, functionality, design or for other reasons.
It accepts no liability for any errors, inaccuracies or possible lack of information in this document.