

CHV-T 150/3,3

CHV-T 150/3,3, Three-phase MV power capacitors

Code: R8K150000330E

> BIL (kV): 20/60
> Measure: Three-phase
> Frequency (Hz): 50
> Q (kvar): 150
> Un (V): 3300

Description

CHV medium-voltage capacitor, made up of different basic capacitive elements.
These basic units are connected in series and parallel with the purpose of obtaining the power at the necessary voltage.

All the elements are protected by an internal fuse. This fuse is disconnected if a fault is detected, isolating only the basic unit that has been damaged. Internal fuse protection ensures greater system safety and service continuity.

Application

CHV-T capacitors are used to build static and automatic capacitor banks of up to 12 kV.

The stainless-steel box of the **CHV-T** makes it a versatile product that can be used in indoor and outdoor applications.

Creation date: 23/11/2026 - CIRCUTOR, SAU reserves the right to make technical changes or modify the content/images of this document without prior notice, in order to improve its reliability, functionality, design or for other reasons.
It accepts no liability for any errors, inaccuracies or possible lack of information in this document.



CHV-T 150/3,3

Three-phase capacitor (indoor and outdoor use)

Code: R8K150000330E

Specifications

Isolators

Material	Porcelain
Insulation level	20/60 kV
Pollution level	16 mm / kV

Electrical characteristics

Losses (W)	≤ 0,15 W / kvar
Power	150 kvar
Discharge resistance	Location: Indoor Discharge time: ≤ 10 minutes Residual voltage: ≤ 75 V
Surge	1.1 A 12 h in 24 hours 1.15 A 30 min in 24 hours 1.2 A 5 min in 24 hours 1.30 1 min in 24 hours
Voltage	3300 V

Mechanical characteristics

Size (mm) width x height x depth	350 x 572 x 160 (mm)
Material	Dielectric: Rough polypropylene film Electrode: Laser-cut aluminium foil Impregnating oil: SAS-40E or M/DBT (PCB-free)
Envelope	Stainless steel painted RAL 7035. With 2 wings for fixing to the frame to avoid mechanical stress on the porcelain terminals.
Fastening	Horizontal or vertical
Weight (kg)	31

Environmental characteristics

Installation, location, position.	Indoor / Outdoor

Standards

Standards	IEC 60871-1, IEC 60871-5

CHV-T

Three-phase MV power capacitors

CODE	TYPE	Q (kvar)	Un (V)	BIL (kV)	w x h x d	weight (kg)
BIL 20/60 kV (50 Hz) - 3,3 kV						
R8K0500003305	CHV-T 50/3,3	50	3300	20/60	350 x 422 x 160	18,8
R8K0750003305	CHV-T 75/3,3	75	3300	20/60	350 x 472 x 160	22,4
R8K100000330E	CHV-T 100/3,3	100	3300	20/60	350 x 472 x 160	22,8
R8K150000330E	CHV-T 150/3,3	150	3300	20/60	350 x 572 x 160	30
R8K200000330E	CHV-T 200/3,3	200	3300	20/60	350 x 632 x 160	34,4
R8K250000330E	CHV-T 250/3,3	250	3300	20/60	350 x 802 x 160	45,7

Creation date: 23/11/2026 - CIRCUTOR, SAU reserves the right to make technical changes or modify the content/images of this document without prior notice, in order to improve its reliability, functionality, design or for other reasons.
It accepts no liability for any errors, inaccuracies or possible lack of information in this document.



CHV-T 150/3,3

Three-phase capacitor (indoor and outdoor use)

Code: R8K150000330E

CODE	TYPE	Q (kvar)	Un (V)	BIL (kV)	w x h x d	weight (kg)
R8K300000330E	CHV-T 300/3,3	300	3300	20/60	350 x 802 x 160	46,7
R8K333000330E	CHV-T 333/3,3	333	3300	20/60	350 x 862 x 175	55,6
R8K400000330E	CHV-T 400/3,3	400	3300	20/60	350 x 892 x 175	58,3
BIL 20/60 kV (50 Hz) - 6,6 kV						
R8K0500006605	CHV-T 50/6,6	50	6600	20/60	350 x 422 x 160	19,2
R8K0750006605	CHV-T 75/6,6	75	6600	20/60	350 x 472 x 160	22,6
R8K1000006605	CHV-T 100/6,6	100	6600	20/60	350 x 472 x 160	23
R8K1500006605	CHV-T 150/6,6	150	6600	20/60	350 x 572 x 160	30,2
R8K200000660E	CHV-T 200/6,6	200	6600	20/60	350 x 632 x 160	38,3
R8K250000660E	CHV-T 250/6,6	250	6600	20/60	350 x 802 x 160	45,9
R8K300000660E	CHV-T 300/6,6	300	6600	20/60	350 x 802 x 160	46,9
R8K333000660E	CHV-T 333/6,6	333	6600	20/60	350 x 862 x 175	55,9
R8K400000660E	CHV-T 400/6,6	400	6600	20/60	350 x 892 x 175	58,6
R8K500000660E	CHV-T 500/6,6	500	6600	20/60	350 x 1032 x 175	69,7
R8K600000660E	CHV-T 600/6,6	600	6600	20/60	350 x 1182 x 175	81,2
R8K750000660E	CHV-T 750/6,6	750	6600	20/60	350 x 1252 x 200	97,6
BIL 28/75 kV (50 Hz) - 11 kV						
R8L0500011005	CHV-T 50/11	50	11000	28/75	350 x 422 x 160	19,3
R8L0750011005	CHV-T 75/11	75	11000	28/75	350 x 472 x 160	22,7
R8L1000011005	CHV-T 100/11	100	11000	28/75	350 x 472 x 160	23
R8L1500011005	CHV-T 150/11	150	11000	28/75	350 x 572 x 160	30,1
R8L2000011005	CHV-T 200/11	200	11000	28/75	350 x 632 x 160	34,4
R8L2500011005	CHV-T 250/11	250	11000	28/75	350 x 802 x 160	45,7
R8L3000011005	CHV-T 300/11	300	11000	28/75	350 x 802 x 160	46,5
R8L3330011005	CHV-T 333/11	333	11000	28/75	350 x 862 x 175	53
R8L600001100E	CHV-T 600/11	600	11000	28/75	350 x 1182 x 175	80,7
R8L750001100E	CHV-T 750/11	750	11000	28/75	350 x 1252 x 200	92,1

Codes R8xxxxxxxxxxx5 cannot have an internal fuse.

Creation date: 23/11/2026 - CIRCUTOR, SAU reserves the right to make technical changes or modify the content/images of this document without prior notice, in order to improve its reliability, functionality, design or for other reasons.
It accepts no liability for any errors, inaccuracies or possible lack of information in this document.



CHV-T 150/3,3

Three-phase capacitor (indoor and outdoor use)

Code: R8K150000330E

Dimensions

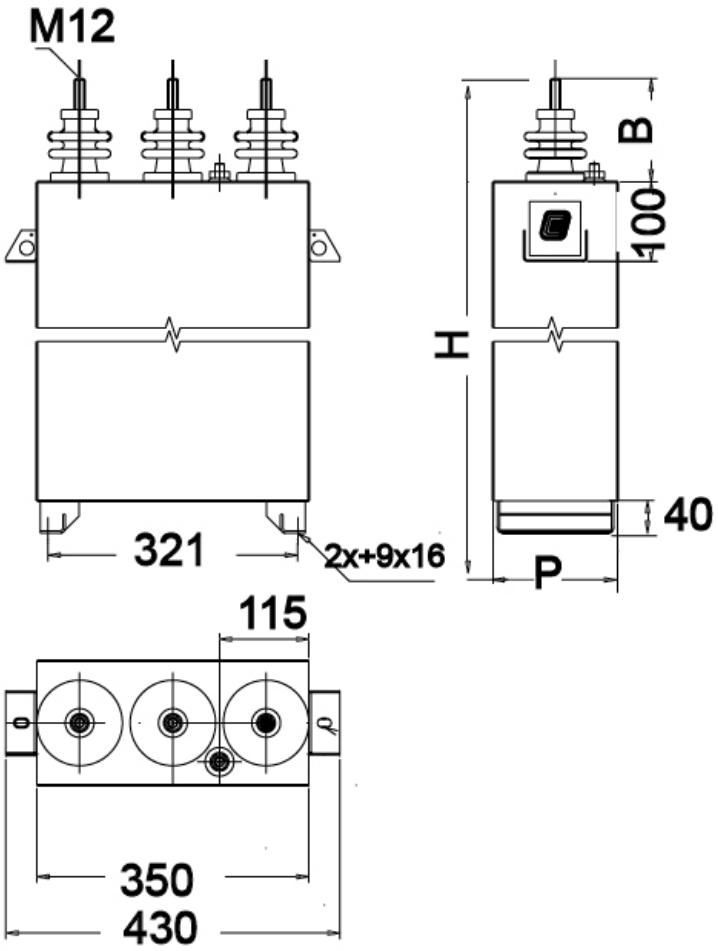

Creation date: 23/11/2026 - CIRCUTOR, SAU reserves the right to make technical changes or modify the content/images of this document without prior notice, in order to improve its reliability, functionality, design or for other reasons.
It accepts no liability for any errors, inaccuracies or possible lack of information in this document.