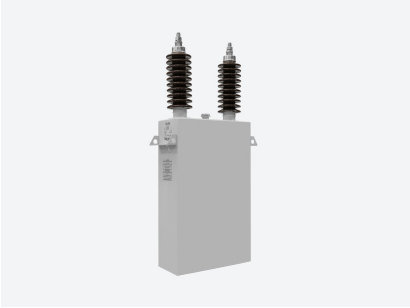

CHV-M 300/3,81

CHV-M 300/3,81, Single-phase MV power capacitors

Code: R8A300000381E

> BIL (kV): 20/60
> Measure: Single-phase
> Frequency (Hz): 50
> Q (kvar): 300
> Un (V): 3810

Description

CHV medium-voltage capacitor, made up of different basic capacitive elements.
These basic units are connected in series and parallel with the purpose of obtaining the power at the necessary voltage.

All the elements are protected by an internal fuse. This fuse is disconnected if a fault is detected, isolating only the basic unit that has been damaged. Internal fuse protection ensures greater system safety and service continuity.

Application

CHV-M capacitors are used to build static and automatic MV capacitor banks.

We will vary the number of capacitors in parallel and/or in series depending on the power and voltage required. The stainless-steel box of the **CHV** capacitor makes it a versatile product that can be used in indoor and outdoor applications.

Creation date: 24/11/2026 - CIRCUTOR, SAU reserves the right to make technical changes or modify the content/images of this document without prior notice, in order to improve its reliability, functionality, design or for other reasons.
It accepts no liability for any errors, inaccuracies or possible lack of information in this document.

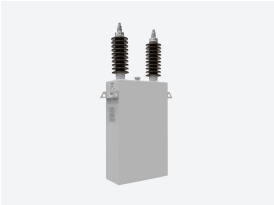

CHV-M 300/3,81

Single-phase capacitor (indoor and outdoor use)

Code: R8A300000381E

Specifications

Isolators

Material	Porcelain
Insulation level	20/60 kV
Pollution level	16 mm / kV

Electrical characteristics

Losses (W)	≤ 0,15 W / kvar
Power	300 kvar
Discharge resistance	Location: Indoor Discharge time: ≤ 10 minutes Residual voltage: ≤ 75 V
Surge	1.1 A 12 h in 24 hours 1.15 A 30 min in 24 hours 1.2 A 5 min in 24 hours 1.30 1 min in 24 hours
Voltage	3810 V

Mechanical characteristics

Size (mm) width x height x depth	350 x 867 x 160 (mm)
Material	Dielectric: Rough polypropylene film Electrode: Laser-cut aluminium foil Impregnating oil: SAS-40E or M/DBT (PCB-free)
Envelope	Stainless steel painted RAL 7035. With 2 wings for fixing to the frame to avoid mechanical stress on the porcelain terminals.
Fastening	Horizontal or vertical
Weight (kg)	45,8

Environmental characteristics

Installation, location, position.	Indoor / Outdoor

Standards

Standards	IEC 60871-1, IEC 60871-5

CHV-M
Single-phase MV power capacitors (indoor and outdoor use)

CODE	TYPE	Q (kvar)	Un (V)	BIL (kV)	w x h x d	weight (kg)
BIL 20/60 kV (50 Hz) - 3,81 kV						
R8A0500003815	CHV-M 50/3,81	50	3810	20/60	350 x 487 x 160	18,2
R8A075000381E	CHV-M 75/3,81	75	3810	20/60	350 x 487 x 160	18,5
R8A100000381E	CHV-M 100/3,81	100	3810	20/60	350 x 537 x 160	21,9
R8A150000381E	CHV-M 150/3,81	150	3810	20/60	350 x 637 x 160	29,1
R8A167000381E	CHV-M 167/3,81	167	3810	20/60	350 x 637 x 160	29,3
R8A200000381E	CHV-M 200/3,81	200	3810	20/60	350 x 697 x 160	33,5

Creation date: 24/11/2026 - CIRCUTOR, SAU reserves the right to make technical changes or modify the content/images of this document without prior notice, in order to improve its reliability, functionality, design or for other reasons.
It accepts no liability for any errors, inaccuracies or possible lack of information in this document.

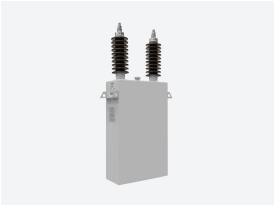

CHV-M 300/3,81

Single-phase capacitor (indoor and outdoor use)

Code: R8A300000381E

CODE	TYPE	Q (kvar)	Un (V)	BIL (kV)	w x h x d	weight (kg)
R8A250000381E	CHV-M 250/3,81	250	3810	20/60	350 x 867 x 160	44,8
R8A300000381E	CHV-M 300/3,81	300	3810	20/60	350 x 867 x 160	45,8
R8A333000381E	CHV-M 333/3,81	333	3810	20/60	350 x 957 x 160	52,3
R8A500000381E	CHV-M 500/3,81	500	3810	20/60	350 x 1097 x 175	68,3
BIL 28/75 kV (50 Hz) - 6,35 kV						
R8B0500006355	CHV-M 50/6,35	50	3810	20/60	350 x 487 x 160	17,9
R8B0750006355	CHV-M 75/6,35	75	3810	20/60	350 x 537 x 160	21,8
R8B1000006355	CHV-M 100/6,35	100	6350	28/75	350 x 537 x 160	21,8
R8B150000635E	CHV-M 150/6,35	150	6350	28/75	350 x 637 x 160	28,6
R8B167000635E	CHV-M 167/6,35	167	6350	28/75	350 x 637 x 160	29,1
R8B250000635E	CHV-M 250/6,35	250	6350	28/75	350 x 757 x 160	37,8
R8B300000635E	CHV-M 300/6,35	300	6350	28/75	350 x 867 x 160	45,3
R8B333000635E	CHV-M 333/6,35	333	6350	28/75	350 x 857 x 175	49,4
R8B400000635E	CHV-M 400/6,35	400	6350	28/75	350 x 927 x 175	54,5
R8B500000635E	CHV-M 500/6,35	500	6350	28/75	350 x 1067 x 175	65,6
R8B600000635E	CHV-M 600/6,35	600	6350	28/75	350 x 1247 x 175	79,2
R8B750000635E	CHV-M 750/6,35	750	6350	28/75	350 x 1217 x 200	90,4
BIL 38/95 kV (50 Hz) - 9,53 kV						
R8C0500009535	CHV-M 50/9,53	50	9530	38/95	350 x 530 x 160	19,5
R8C0750009535	CHV-M 75/9,53	75	9530	38/95	350 x 530 x 160	20,2
R8C1000009535	CHV-M 100/9,53	100	9530	38/95	350 x 580 x 160	23,6
R8C1500009535	CHV-M 150/9,53	150	9530	38/95	350 x 680 x 160	31
R8C2500009535	CHV-M 250/9,53	250	9530	38/95	350 x 910 x 160	46,9
R8C300000953E	CHV-M 300/9,53	300	9530	38/95	350 x 910 x 160	48
R8C333000953E	CHV-M 333/9,53	333	9530	38/95	350 x 1000 x 160	54,7
R8C400000953E	CHV-M 400/9,53	400	9530	38/95	350 x 1000 x 175	59,7
R8C500000953E	CHV-M 500/9,53	500	9530	38/95	350 x 1140 x 175	71
R8C600000953E	CHV-M 600/9,53	600	9530	38/95	350 x 1290 x 175	83,1
R8C750000953E	CHV-M 750/9,53	750	9530	38/95	350 x 1257 x 200	90,4
BIL 50/125 kV (50 Hz) - 12,7 kV						
R8D0500012705	CHV-M 50/12,7	50	12700	50/125	350 x 615 x 160	19,7
R8D0750012705	CHV-M 75/12,7	75	12700	50/125	350 x 665 x 160	23,4
R8D1000012705	CHV-M 100/12,7	100	12700	50/125	350 x 715 x 160	26,8
R8D1500012705	CHV-M 150/12,7	150	12700	50/125	350 x 765 x 160	31,2
R8D1670012705	CHV-M 167/12,7	167	12700	50/125	350 x 825 x 160	35,1
R8D2500012705	CHV-M 250/12,7	250	12700	50/125	350 x 995 x 160	47
R8D3000012705	CHV-M 300/12,7	300	12700	50/125	350 x 995 x 160	48,1
R8D3330012705	CHV-M 333/12,7	333	12700	50/125	350 x 1055 x 175	56,9
R8D4000012705	CHV-M 400/12,7	400	12700	50/125	350 x 1085 x 175	59,6

Creation date: 24/11/2026 - CIRCUTOR, SAU reserves the right to make technical changes or modify the content/images of this document without prior notice, in order to improve its reliability, functionality, design or for other reasons.
It accepts no liability for any errors, inaccuracies or possible lack of information in this document.

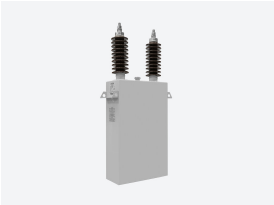

CHV-M 300/3,81

Single-phase capacitor (indoor and outdoor use)

Code: R8A300000381E

CODE	TYPE	Q (kvar)	Un (V)	BIL (kV)	w x h x d	weight (kg)
R8D600001270E	CHV-M 600/12,7	600	12700	50/125	350 x 1375 x 175	83
R8D750001270E	CHV-M 750/12,7	750	12700	50/125	350 x 1405 x 200	98,8
BIL 70/170 kV (50 Hz) - 19,05 kV						
R8E0500019055	CHV-M 50/19,05	50	19050	70/170	350 x 644 x 160	23,3
R8E0750019055	CHV-M 75/19,05	75	19050	70/170	350 x 644 x 160	23,6
R8E1500019055	CHV-M 150/19,05	150	19050	70/170	350 x 804 x 160	35
R8E1670019055	CHV-M 167/19,05	167	19050	70/170	350 x 804 x 160	35,3
R8E2000019055	CHV-M 200/19,05	200	19050	70/170	350 x 864 x 160	39,4
R8E2500019055	CHV-M 250/19,05	250	19050	70/170	350 x 964 x 175	50,8
R8E3000019055	CHV-M 300/19,05	300	19050	70/170	350 x 1034 x 175	56,5
R8E3330019055	CHV-M 333/19,05	333	19050	70/170	350 x 1034 x 175	57,1
R8E4000019055	CHV-M 400/19,05	400	19050	70/170	350 x 1134 x 175	64,4
R8E5000019055	CHV-M 500/19,05	500	19050	70/170	350 x 1244 x 175	73,7
R8E6000019055	CHV-M 600/19,05	600	19050	70/170	350 x 1264 x 200	84,1
R8E7500019055	CHV-M 750/19,05	750	19050	70/170	350 x 1454 x 200	104,2

Codes R8xxxxxxxxxxx5 cannot have an internal fuse.

Creation date: 24/11/2026 - CIRCUTOR, SAU reserves the right to make technical changes or modify the content/images of this document without prior notice, in order to improve its reliability, functionality, design or for other reasons.
It accepts no liability for any errors, inaccuracies or possible lack of information in this document.

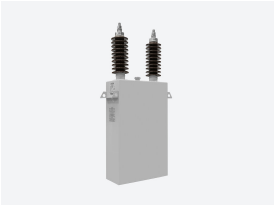

CHV-M 300/3,81

Single-phase capacitor (indoor and outdoor use)

Code: R8A300000381E

Dimensions

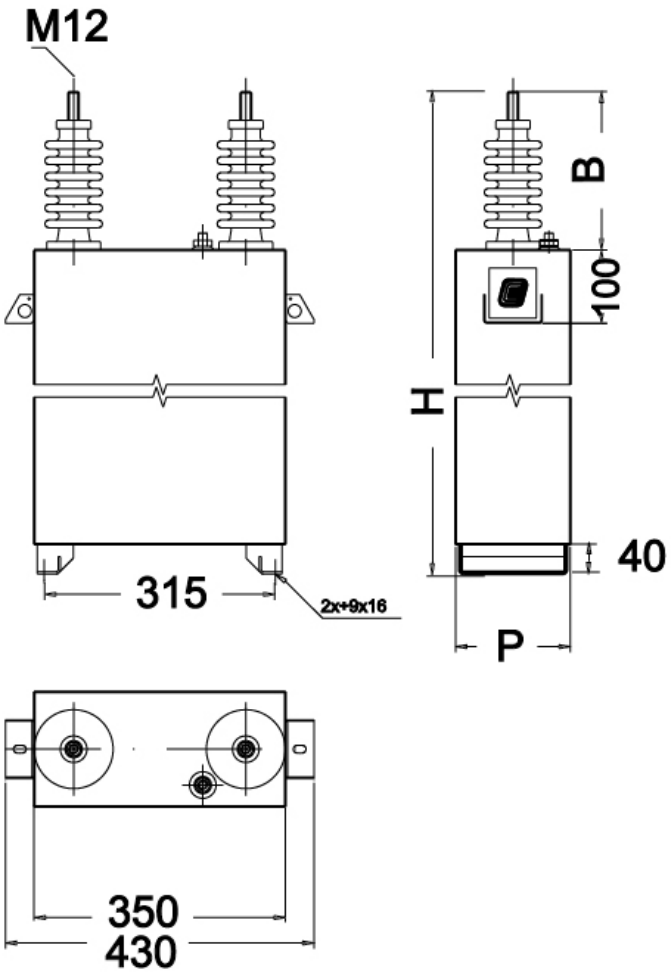

Creation date: 24/11/2026 - CIRCUTOR, SAU reserves the right to make technical changes or modify the content/images of this document without prior notice, in order to improve its reliability, functionality, design or for other reasons.
It accepts no liability for any errors, inaccuracies or possible lack of information in this document.