

AFQm-3WF-075M-480

AFQm-3WF-075M-480, Active multifunctionfilter

Code: R7MMAF.

> System: 3 wires, 230...480 V
> Phase current (A): 75
> Peak current (A): 150
> Mounting: Wall-mounted

Description

The wall-mounted **AFQm** multilevel active filters are the most complete solution for solving power quality problems in three-phase industrial, commercial or service installations caused by the presence of harmonics and the consumption of reactive power. These following characteristics and functions have been implemented:

- Filtering capacity of 30 A, 60 A and 100 A
- Small wall-mounted cabinet easy to install thanks to its small dimensions
- Range for installations with 3 wires (3W model) or 4 wires (4W model)
- Multi-range voltage and dual frequency (50/60 Hz)
- Reduction of harmonic currents up to the fiftieth harmonic (2,500 Hz)
- Selection of harmonic frequencies to be filtered for maximum filter effectiveness
- Power factor correction both inductive and capacitive
- Phase current balancing, improvement of consumption in neutral (4W model)

If higher filtering capabilities are required, up to 100 filters can be connected in parallel (the filters must all be of the same 3 or 4-wire model).

Application

They are an ideal solution for installations with a large amount of single-phase and three-phase loads generating harmonics, such as computers, UPS units, lights, lifting equipment, air-conditioning systems with variable speed drives, etc.
They can also be used in installations that require a good power quality for the purpose of increasing production efficiency and improve supply continuity in the system.



AFQm-3WF-075M-480

Code: R7MMAF.

Specifications

AC power supply

Consumption	1550 W
Frequency	50 / 60 Hz (± 5 %)
Nominal voltage	208 ... 480 V~ F-F (± 10 %)

Mechanical characteristics

Size (mm) width x height x depth	439 x 745 x 288 (mm)
Envelope	Galvanized steel 1,5 mm
Connection type	Network / Ground: M6 terminals, Current: 6-pole connector, RS-485: 3-pole connector, Ethernet: RJ-45
Weight (kg)	56

Environmental characteristics

Protection class	IP 20
Relative humidity (without condensation)	0 ... 95 %
Storage temperature	-20 ... +50 °C
Working temperature	-10 ... +45 °C

Electrical characteristics

Current crest factor	2:1
Maximum phase current	75 A (RMS)
Earthing system	TN, TT

Current measurement circuit

Transformation ratio	5 ... 5000 / 5A

Communication Network

Protocol	TCP/IP, Modbus TCP
Technology / Interface	Ethernet

Standards

Electrical safety, Maximum height (m)	3000 (2000 m without performance degradation)
Standards	IEC 62477-1:2012, IEC 55011:2011, IEC 61000-6-2, IEC 61000-6-4:2007,IEC 61439-1:2011

User interface

Display type	TFT color, 3.5" touchscreen

Measurement accuracy

Voltage harmonics (THD)	25 % (max)

Creation date: 23/11/2026 - CIRCUTOR, SAU reserves the right to make technical changes or modify the content/images of this document without prior notice, in order to improve its reliability, functionality, design or for other reasons.
It accepts no liability for any errors, inaccuracies or possible lack of information in this document.



AFQm-3WF-075M-480

Code: R7MMAF.

Features / performance

Phase compensation	Selectable
Reactive power compensation (Kvar)	selectable
Filtering / Response time	2° ... 50° harmonic (selectable) / < 100 µs
Parallel assembly/installation	Up to 100 units, with different gauges. Transformer connection only to the Master unit
Priority scheduling	selectable

Power supply output

Power	45812 VA

Serial communication

Protocol	Modbus/RTU
Technology / Type	RS-485

AFQm-M
Active multifunction filter

CODE	TYPE	System	Phase current (A)	Peak current (A)	Max.neutral current (A)
3 wires 480 V, Wall-mounted cabinet					
R7MM0F.	AFQm-3WF-030M-480	3 wires, 230...480 V	30	60	
R7MMAF.	AFQm-3WF-075M-480	3 wires, 230...480 V	75	150	
R7MM2F.	AFQm-3WF-100M-480	3 wires, 230...480 V	100	200	
4 wires 400 V, Wall-mounted cabinet					
R7RM0F.	AFQm -4WF-030M-400	4 wires, 230...400 V	30	60	90
R7RMAF.	AFQm -4WF-075M-400	4 wires, 230...400 V	75	150	225
R7RM2F.	AFQm-4WF-100M-400	4 wires, 230...400 V	100	200	300

Please contact our technical department for networks with high THD(V) levels.
All equipment has built-in EMI filters



AFQm-3WF-075M-480

Code: R7MMAF.

Dimensions

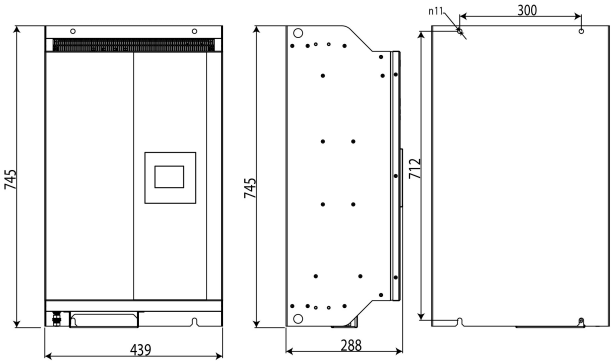

Connections

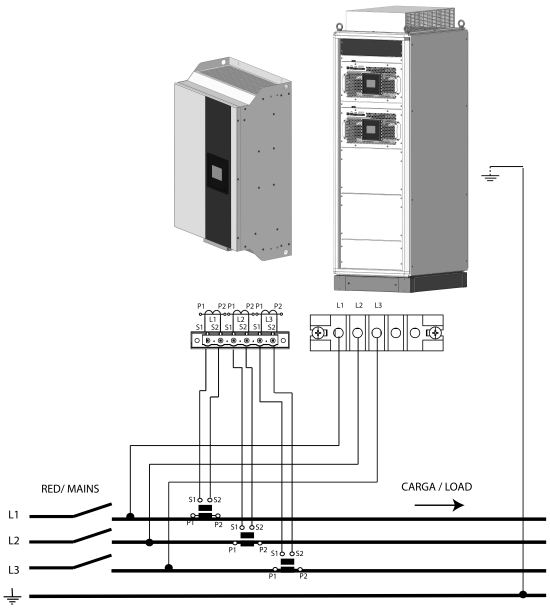

Creation date: 23/11/2026 - CIRCUTOR, SAU reserves the right to make technical changes or modify the content/images of this document without prior notice, in order to improve its reliability, functionality, design or for other reasons.
It accepts no liability for any errors, inaccuracies or possible lack of information in this document.