

OPTIM FR8-P&P-700-440

OPTIM FR8-P&P-700-440, Detuned capacitor bank

Code: R54U40.

> Cable section (mm2): 3x150
> Nr steps: 7
> kvar (400 V): 579
> kvar (440 V): 700
> Optional circuit breaker (A) : 1250
> Optional manual switch (A): 1250
> Composition: 7 x 100
> Use voltage (V): 440

Description

The **OPTIM FR P&P** Series capacitor banks with detuned filters have been designed for power compensation purposes in networks with fluctuating load levels, a high content of harmonics and where there is a risk of resonance. Power variations are relatively slow (in seconds) so that the switching operations are carried out with contactors.

Application

Its application is mainly focused on the compensation of installations with different loads, which require a regulated compensation, as a result of the power factor variations and where there is a high content of harmonics in the network.

- Fixed detuned filters. For the compensation of transformers and motors (**OPTIM FRF** / **FRM**)
- Automatic detuned filters, For the monitoring of variable loads (**OPTIM FR P&P**).



OPTIM FR8-P&P-700-440

Automatic capacitor banks with detuned filters

Code: R54U40.

Specifications

Electrical characteristics

Losses (W)	< 0,5 W/kvar
Discharge resistance	75 V / 3 min
Surge	10 % 8 h over 24 h 15 % up to 15 min over 24 hours 20 % up to 5 min over 24 hours 30 % up to 1 min over 24 hours
Manoeuvre voltage	Contactors: 230 V
Reinforcement voltage	440 V
Tolerance C	-5% / 10 %
Voltage	400 V (50 Hz) (other voltages on request)

Mechanical characteristics

Size (mm) width x height x depth	1500 x 1900 x 650 (mm)
Envelope	Sheet metal RAL 7035 Grey / RAL 3005 Garnet
Thermal management	Natural or forced according to options
Fastening	Vertical / Self-supporting
Weight (kg)	555

Environmental characteristics

Protection class	IP 21
Relative humidity (without condensation)	80%
Working temperature	Tª class D: Daily average: 45 °C, annual average: 35 °C, maximum: 55 °C, minimum: -50 °C

Current measurement circuit

Permanent overload	1,3 In
Transformation ratio	In / 5A

Standards

Electrical safety, Maximum height (m)	2000 m
Standards	IEC 60831-1, UNE 60831-1, IEC 61921, IEC 60439, IEC 61439

Features / performance

Components	CLZ capacitor (460 V) Contactors with pre-insertion block and quick discharge resistor Two-pole protection circuit-breaker for capacitor bank and regulator operations. Power factor regulator of the Computer C Wi-Fi series. Detuned filters tuned at 189 Hz (50 Hz) /227 Hz (60 Hz) for the protection against harmonics present in the network and to avoid the problems of resonance with fifth or higher order harmonics. Built-in thermostat for the disconnection of the step in case of excessive temperatures (90 °C). Auto-transformer.
Optional	Manual capacitor bank header switch Automatic capacitor bank header switch Automatic switch + Earth leakage protection at the capacitor bank's header Forced ventilation unit + thermostat Polycarbonate plate to protect against direct contacts

Creation date: 24/11/2026 - CIRCUTOR, SAU reserves the right to make technical changes or modify the content/images of this document without prior notice, in order to improve its reliability, functionality, design or for other reasons.
It accepts no liability for any errors, inaccuracies or possible lack of information in this document.



OPTIM FR8-P&P-700-440

Automatic capacitor banks with detuned filters

Code: R54U40.

Protection

Element	Individual protection of each step with fuses with high rupture power (HRP). NH-00 Series.

OPTIM FR P&P

Automatic capacitor banks with detuned filters (contactors switching), type P=7% (fres=189 Hz), 50 Hz.

CODE	TYPE	kvar (400 V)	kvar (440 V)	Nr steps	Cable section (mm2)
OPTIM FRS-P&P, automatic capacitor banks with computer C Wi-Fi regulator					
R54R64.	OPTIM FRS-P&P-31,25-440	26	31,25	3	10
R54R74.	OPTIM FRS-P&P-43,75-440	36	43,75	3	25
R54R81.	OPTIM FRS-P&P-62,5-440	52	62,5	3	35
R54R88.	OPTIM FRS-P&P-90-440	74	90	4	70
R54R92.	OPTIM FRS-P&P-105-440	87	105	4	70
R54R95.	OPTIM FRS-P&P-120-440	99	120	4	95
OPTIM FR4-P&P, automatic capacitor banks with computer C Wi-Fi regulator					
R54S24.	OPTIM FR4-P&P-150-440	125	150	3	95
R54S25.	OPTIM FR4-P&P-175-440	145	175	3	120
R54S28.	OPTIM FR4-P&P-200-440	165	200	3	150
R54S29.	OPTIM FR4-P&P-250-440	207	250	3	185
R54S30.	OPTIM FR4-P&P-300-440	248	300	4	240
R54S32.	OPTIM FR4-P&P-350-440	289	350	4	2x150
R54S34.	OPTIM FR4-P&P-400-440	331	400	4	2x150
OPTIM FR6-P&P, automatic capacitor banks with computer C Wi-Fi regulator					
R54T25.	OPTIM FR6-P&P-400-440	331	400	5	2x185
R54T30.	OPTIM FR6-P&P-450-440	372	450	5	2x185
R54T35.	OPTIM FR6-P&P-500-440	413	500	5	2x240
R54T40.	OPTIM FR6-P&P-550-440	455	550	6	2x240
R54T45.	OPTIM FR6-P&P-600-440	496	600	6	2x240
OPTIM FR8-P&P, automatic capacitor banks with computer C Wi-Fi regulator					
R54U36.	OPTIM FR8-P&P-600-440	496	600	7	2x240
R54U38.	OPTIM FR8-P&P-650-440	537	650	7	3x150
R54U40.	OPTIM FR8-P&P-700-440	579	700	7	3x150
R54U42.	OPTIM FR8-P&P-750-440	620	750	8	3x185
R54U44.	OPTIM FR8-P&P-800-440	661	800	8	3x185
OPTIM FR10-P&P, automatic capacitor banks with computer C Wi-Fi regulator					
R54V25.	OPTIM FR10-P&P-800-440	661	800	8	2x240/ 240
R54V30.	OPTIM FR10-P&P-850-440	702	850	9	2x240/ 240
R54V35.	OPTIM FR10-P&P-900-440	744	900	9	2x240/ 240
R54V40.	OPTIM FR10-P&P-950-440	785	950	10	2x240/ 2x185

Creation date: 24/11/2026 - CIRCUTOR, SAU reserves the right to make technical changes or modify the content/images of this document without prior notice, in order to improve its reliability, functionality, design or for other reasons.
It accepts no liability for any errors, inaccuracies or possible lack of information in this document.



OPTIM FR8-P&P-700-440

Automatic capacitor banks with detuned filters

Code: R54U40.

CODE	TYPE	kvar (400 V)	kvar (440 V)	Nr steps	Cable section (mm2)
R54V45.	OPTIM FR10-P&P-1000-440	826	1000	10	2x240/ 2x185
OPTIM FR12-P&P, automatic capacitor banks with computer C Wi-Fi regulator					
R54W50.	OPTIM FR12-P&P-1050-440	868	1050	11	2x240/ 2x240
R54W55.	OPTIM FR12-P&P-1100-440	909	1100	11	2x240/ 2x240
R54W60.	OPTIM FR12-P&P-1150-440	950	1150	12	2x240/ 2x240
R54W65.	OPTIM FR12-P&P-1200-440	992	1200	12	2x240/ 2x240

Cable cross-section for installations with Un= 400 V. The installation company must ensure compliance with the low voltage directive at all times, in accordance with the characteristics of each installation and type of cable. All batteries with computer C Wi-Fi regulator come with charge VAR system

Creation date: 24/11/2026 - CIRCUTOR, SAU reserves the right to make technical changes or modify the content/images of this document without prior notice, in order to improve its reliability, functionality, design or for other reasons.
It accepts no liability for any errors, inaccuracies or possible lack of information in this document.



OPTIM FR8-P&P-700-440

Automatic capacitor banks with detuned filters

Code: R54U40.

Dimensions

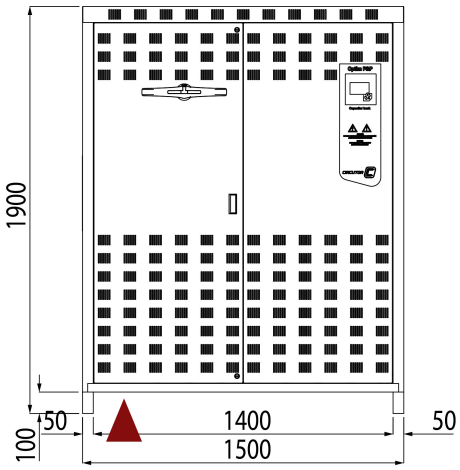

Connections

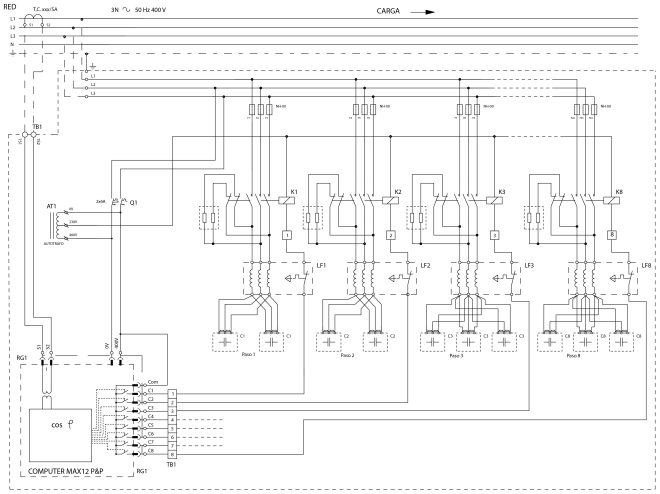

Creation date: 24/11/2026 - CIRCUTOR, SAU reserves the right to make technical changes or modify the content/images of this document without prior notice, in order to improve its reliability, functionality, design or for other reasons.
It accepts no liability for any errors, inaccuracies or possible lack of information in this document.