

SVGm-3WF-100M-480

SVGm-3WF-100M-480, Static Var Generator with multilevel technology

Code: R4P3M2.

> EMI filter: 1
> System: 3 wires, 230...480 V
> kvar (230 V): 57,5
> kvar (400 V): 100
> kvar (440 V): 100
> kvar (480 V): 100
> Phase current: 145
> Use voltage (V): 480

Description

SVGm cabinet-type static var generators are the most accurate power factor correction solution in both unbalanced three-phase systems and installations with inductive and capacitive reactive power. They can be used in three-phase industrial, commercial or service installations, and they are not affected by the installation's harmonics. Much safer device with minimal maintenance. This product range features rack assembly in standard cabinets, designed to simplify installation.

The implemented characteristics and functions are as follows:

- Power factor correction (inductive/capacitive) from 30 to 100 kvar (3W) and 20 to 69 kvar (4W) per cabinet.
- The 100 kvar (3W) and 69 kvar (4W) rack-type module's compact dimensions make it easy to install in standard cabinets.
- Multi-range voltage and frequency (50/60 Hz).
- Harmonic current immunity.
- Cos φ range from 0.7 inductive...to...0.7 capacitive.
- Web-based performance monitoring.
- Internal short-circuit protection.

If higher reactive power compensation capacity is required, up to 100 devices can be connected in parallel.

Application

Ideal solution for individual loads or installations with numerous single-phase and three-phase loads, whether inductive or capacitive. Also, for installations whose load fluctuates over short time frames. Typical loads would be overhead cranes, welding equipment, lifts, drilling/shredding systems, data centres.

Creation date: 24/11/2026 - CIRCUTOR, SAU reserves the right to make technical changes or modify the content/images of this document without prior notice, in order to improve its reliability, functionality, design or for other reasons.
It accepts no liability for any errors, inaccuracies or possible lack of information in this document.



SVGm-3WF-100M-480

Static Var Generator with multilevel technology

Code: R4P3M2.

Specifications

AC power supply

Consumption	2070 W (Consumo máximo)
Frequency	50 / 60 Hz ± 5 %
Nominal voltage	208 ... 480 V~ F-F (± 10 %)

Mechanical characteristics

Size (mm) width x height x depth	439 x 745 x 288 (mm)
Noise	< 60 dBA
Weight (kg)	56

Environmental characteristics

Protection class	IP20
Relative humidity (without condensation)	0 .... 95 %
Storage temperature	-20 ... +50 °C
Working temperature	-10 ... +45 °C

Electrical characteristics

Maximum phase current	145 A (RMS)
Earthing system	TN, TT

Current measurement circuit

Consumption	1,5 VA por transformador
Transformation ratio	Transformer: 5/5A ... 5000/5A

Communication Network

Protocol	TCP/IP, Modbus TCP
Technology / Interface	Ethernet

Standards

Electrical safety, Maximum height (m)	3000 (2000 m sin limitar prestaciones)
Standards	IEC 61000-6-4, UNE-EN 55011, IEC 61000-6-2, IEC 62477-1, IEC 61439-1, IEC 60721-3-3 (Indoor conditioned)

Features / performance

Reactive power compensation (Kvar)	Selectable: 0.7 inductive ... 1 ... 0.7 capacitive
Filtering / Response time	< 100 µs
Parallel assembly/installation	Up to 100 devices of different caliber. Connection of transformers only in Master unit.

Creation date: 24/11/2026 - CIRCUTOR, SAU reserves the right to make technical changes or modify the content/images of this document without prior notice, in order to improve its reliability, functionality, design or for other reasons.
It accepts no liability for any errors, inaccuracies or possible lack of information in this document.



SVGm-3WF-100M-480

Static Var Generator with multilevel technology

Code: R4P3M2.

Serial communication

Protocol	Modbus/RTU
Technology / Type	RS-485

SVGm

Static Var Generator with multilevel technology, 50 / 60 Hz.

CODE	TYPE	System	kvar (230 V)	kvar (400 V)	kvar (440 V)	kvar (480 V)	kvar (500 V)	kvar (690 V)	Phase current	Q (kvar)	Phase current (A)
3 wires 480 V, Wall-mounted cabinet											
R4P3M0.	SVGm-3WF-30M-480	3 wires, 230...480 V	17,4	30	30	30	-	-	44		
R4P3M6.	SVGm-3WF-075M-480	3 wires, 230...480 V	43,1	75	75	75	-	-	110		
R4P3M2.	SVGm-3WF-100M-480	3 wires, 230...480 V	57,5	100	100	100	-	-	145		
4 wires 400 V, Wall-mounted cabinet											
R4P4MA.	SVGm-4WF-020M-400	4 wires, 230...400 V	12	20,7	-	-	-	-	30		
R4P4ML.	SVGm-4WF-050M-400	4 wires, 230...400 V	30	51,7	-	-	-	-	75		
R4P4MC.	SVGm-4WF-069M-400	4 wires, 230...400 V	40	69	-	-	-	-	100		
3 wires 480 V, Floor-mounted cabinet											
R4T3F2.	SVGm-3WP-100C-480	3 wires, 230...480 V	57,5	100	100	100	-	-		-	145
R4T3F3.	SVGm-3WP-200C-480	3 wires, 230...480 V	115	200	200	200	-	-		-	290
R4T3F4.	SVGm-3WP-300C-480	3 wires, 230...480 V	172,5	300	300	300	-	-		-	435
R4T3F5.	SVGm-3WP-400C-480	3 wires, 230...480 V	230	400	400	400	-	-		-	580
3 wires 690 V, Floor-mounted cabinet											
R4T5F2.	SVGm-3WP-100C-690	3 wires, 500 ... 690 V	-	-	-	-	72	100		-	84
R4T5F3.	SVGm-3WP-200C-690	3 wires, 500 ... 690 V	-	-	-	-	144	200		-	168
R4P5F4.	SVGm-3WF-300C-690	3 wires, 500 ... 690 V	-	-	-	-	216	300	210		
R4T5F4.	SVGm-3WP-300C-690	3 wires, 500 ... 690 V	-	-	-	-	216	300		-	252
R4P5F5.	SVGm-3WF-400C-690	3 wires, 500 ... 690 V	-	-	-	-	288	400	280		
R4T5F5.	SVGm-3WP-400C-690	3 wires, 500 ... 690 V	-	-	-	-	288	400		-	336
4 wires 400 V, Floor-mounted cabinet											
R4T4FC.	SVGm-4WP-069C-400	4 wires, 230...400 V	40	69	-	-	-	-		-	100
R4T4FD.	SVGm-4WP-138C-400	4 wires, 230...400 V	80	138	-	-	-	-		-	200
R4T4FE.	SVGm-4WP-207C-400	4 wires, 230...400 V	119,1	207	-	-	-	-		-	300
R4T4FF.	SVGm-4WP-276C-400	4 wires, 230...400 V	159	276	-	-	-	-		-	400
4 wires 550 V, Floor-mounted cabinet											
R4P6FG.	SVGm-4WF-067C-550	4 wires, 440 ... 550 V	-	-	53	58	-	-	70		
R4T6FG.	SVGm-4WP-067C-550	4 wires, 440 ... 550 V	-	-	53	58	-	-		-	70
R4P6FH.	SVGm-4WF-134C-550	4 wires, 440 ... 550 V	-	-	106	116	-	-	140		
R4T6FH.	SVGm-4WP-134C-550	4 wires, 440 ... 550 V	-	-	106	116	-	-		-	140
R4P6FJ.	SVGm-4WF-201C-550	4 wires, 440 ... 550 V	-	-	159	174	-	-	210		
R4T6FJ.	SVGm-4WP-201C-550	4 wires, 440 ... 550 V	-	-	159	174	-	-		-	210
R4P6FK.	SVGm-4WF-268C-550	4 wires, 440 ... 550 V	-	-	212	232	-	-	280		



SVGm-3WF-100M-480

Static Var Generator with multilevel technology

Code: R4P3M2.

CODE	TYPE	System	kvar (230 V)	kvar (400 V)	kvar (440 V)	kvar (480 V)	kvar (500 V)	kvar (690 V)	Phase current	Q (kvar)	Phase current (A)
R4T6FK.	SVGm-4WFP268C-550	4 wires, 440 ... 550 V	-	-	212	232	-	-		-	280
Rack module											
R4P3R2.	SVGm-3WF-100R-480	3 wires, 230...480 V	57,5	100	100	100	-	-	145		
R4T3R2.	SVGm-3WP-100R-480	3 wires, 230...480 V	57,5	100	100	100	-	-		-	145

All equipment has built-in EMI filters

Creation date: 24/11/2026 - CIRCUTOR, SAU reserves the right to make technical changes or modify the content/images of this document without prior notice, in order to improve its reliability, functionality, design or for other reasons.
It accepts no liability for any errors, inaccuracies or possible lack of information in this document.



SVGm-3WF-100M-480

Static Var Generator with multilevel technology

Code: R4P3M2.

Dimensions

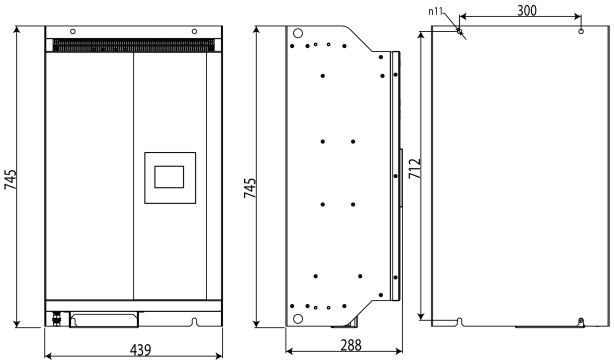

Connections

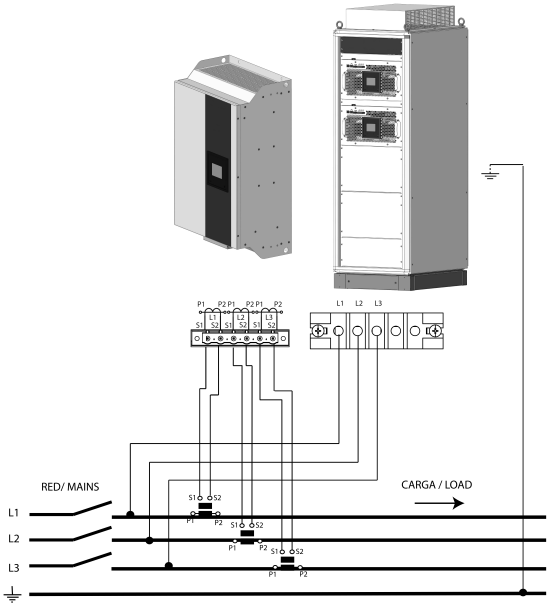

Creation date: 24/11/2026 - CIRCUTOR, SAU reserves the right to make technical changes or modify the content/images of this document without prior notice, in order to improve its reliability, functionality, design or for other reasons.
It accepts no liability for any errors, inaccuracies or possible lack of information in this document.