

# OPTIM EMK6-600-440

OPTIM EMK6-600-440, Static capacitor bank

Code: R46438.

> Cable section (mm2): 2x240
> kvar (400 V): 496
> kvar (440 V): 600
> Optional circuit breaker (A) : 1000
> Optional manual switch (A): 1000
> Composition: 6x100
> Use voltage (V): 440

## Description

The **OPTIM-EMK**-series capacitor banks have been designed for power factor correction in networks with fluctuating loads.

The power variations are relatively quick (measured in milliseconds) and the operation is thus carried out by thyristors, which are connected to a voltage controller board, so that the connection and disconnection of the capacitor is carried out with zero voltage difference.

Transients are prevented between the connection and disconnection of the steps, obtaining an immediate response to the load fluctuations.

## Application

The most common application is with individual loads or in installations where a quick compensation response is needed (for ex., welding units, motors for lifting units, lifts, etc.)



# OPTIM EMK6-600-440

Automatic capacitor banks with static system

Code: R46438.

## Specifications

### Electrical characteristics

| | |
|---|---|
| Discharge resistance | 75 V / 3 min |
| Surge | 10 % 8 h over 24 h 15 % up to 15 min over 24 hours 20 % up to 5 min over 24 hours 30 % up to 1 min over 24 hours |
| Reinforcement voltage | 440 V (400 V) |
| Voltage | 400 V (other voltages on request) |

### Mechanical characteristics

| | |
|---|---|
| Size (mm) width x height x depth | 1200 x 1900 x 650 (mm) |
| Thermal management | Natural or forced according to options |
| Fastening | Vertical. Minimum distance between condensers 2 cm |
| Weight (kg) | 334 |

### Environmental characteristics

| | |
|---|---|
| Protection class | IP 21 |
| Relative humidity (without condensation) | 80% |
| Working temperature | T° class D: Daily average: 45 °C, annual average: 35 °C, maximum: 50 °C, minimum: -25 °C |

### Standards

| | |
|---|---|
| Certifications | VDE 560 |
| Electrical safety, Maximum height (m) | 2000 |
| Standards | IEC 60831-1, IEC 70/7, UNE-EN 20827, UNE-EN 20010, BS 1650 |

### Current measurement circuit

| | |
|---|---|
| Allowable overload | 1,3 In |
| Permanent overload | 1,3 In |

### Features / performance

| | |
|---|---|
| Components | Three-phase measurement CLZ capacitor Static switching unit at each step, comprising static contactors (thyristors) Individual protection at each step via fuses with high cut-off power (APR), NH-00 or Neosted Series according to type Two-pole circuit breaker protection for battery and regulator operation Max Fast computer series reactive energy regulator Radiators for heat dissipation Thermostat built into the radiator itself to disconnect the step in case of high temperature (90 °C) |
| Optional | Manual circuit breaker at capacitor bank header Circuit breaker at capacitor bank header Circuit breaker + earth leakage protection at capacitor bank header Forced ventilation unit + thermostat Polycarbonate plate to avoid direct exposure 400/230 V autotransformer |

Creation date: 24/11/2026 - CIRCUTOR, SAU reserves the right to make technical changes or modify the content/images of this document without prior notice, in order to improve its reliability, functionality, design or for other reasons.
It accepts no liability for any errors, inaccuracies or possible lack of information in this document.



# OPTIM EMK6-600-440

Automatic capacitor banks with static system

Code: R46438.

**OPTIM EMK**
Automatic capacitor banks with static contactor, 50 Hz.

| CODE | TYPE | kvar (400 V) | kvar (440 V) | Cable section (mm2) |
|---|---|---|---|---|
| **OPTIM EMk4** | | | | |
| R46420. | OPTIM EMK4-175-440 | 147 | 175 | 120 |
| R46422. | OPTIM EMK4-250-440 | 207 | 250 | 185 |
| R46424. | OPTIM EMK4-300-440 | 248 | 300 | 240 |
| R46425. | OPTIM EMK4-350-440 | 289 | 350 | 2x150 |
| R46426. | OPTIM EMK4-400-440 | 331 | 400 | 2x185 |
| **OPTIM EMk6** | | | | |
| R46431. | OPTIM EMK6-400-440 | 331 | 400 | 2x185 |
| R46435. | OPTIM EMK6-450-440 | 372 | 450 | 2x185 |
| R46437. | OPTIM EMK6-550-440 | 455 | 550 | 2x240 |
| R46438. | OPTIM EMK6-600-440 | 496 | 600 | 2x240 |
| **OPTIM EMk8** | | | | |
| R46442. | OPTIM EMK8-600-440 | 496 | 600 | 2x240 |
| R46444. | OPTIM EMK8-650-440 | 537 | 650 | 3x150 |
| R46450. | OPTIM EMK8-750-440 | 620 | 750 | 3x185 |
| R46455. | OPTIM EMK8-800-440 | 661 | 800 | 2x240 / 240 |
| **OPTIM EMk10** | | | | |
| R46505. | OPTIM EMK10-850-440 | 702 | 850 | 2x240 / 240 |
| R46604. | OPTIM EMK10-950-440 | 785 | 950 | 2x240 / 2x185 |
| R46605. | OPTIM EMK10-1000-440 | 826 | 1000 | 2x240 / 2x185 |
| **OPTIM EMk12** | | | | |
| R46606. | OPTIM EMK12-1050-440 | 868 | 1050 | 2x240 / 2x240 |
| R46608. | OPTIM EMK12-1150-440 | 950 | 1150 | 2x240 / 2x240 |
| R46609. | OPTIM EMK12-1200-440 | 992 | 1200 | 2x240 / 2x240 |

Cable cross-section for installations with Un= 400 V. The installation company must ensure compliance with the low voltage directive at all times, in accordance with the characteristics of each installation and type of cable.



Creation date: 24/11/2026 - CIRCUTOR, SAU reserves the right to make technical changes or modify the content/images of this document without prior notice, in order to improve its reliability, functionality, design or for other reasons.
It accepts no liability for any errors, inaccuracies or possible lack of information in this document.



# OPTIM EMK6-600-440

Automatic capacitor banks with static system

Code: R46438.

## Dimensions

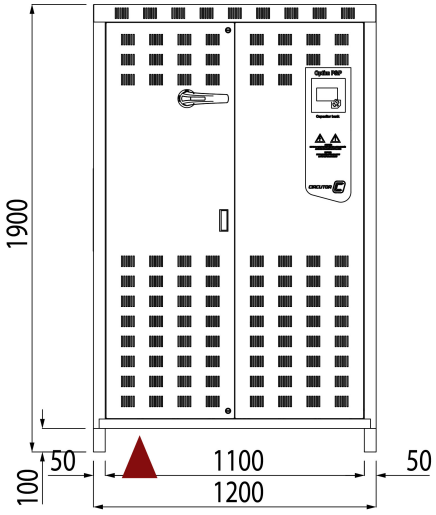


## Connections

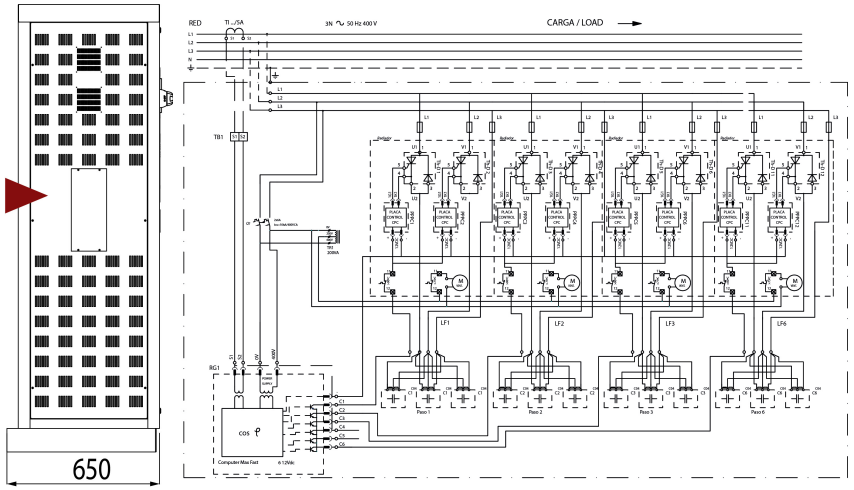




Creation date: 24/11/2026 - CIRCUTOR, SAU reserves the right to make technical changes or modify the content/images of this document without prior notice, in order to improve its reliability, functionality, design or for other reasons.
It accepts no liability for any errors, inaccuracies or possible lack of information in this document.