

OPTIM EMK4-175-440

OPTIM EMK4-175-440, Static capacitor bank

Code: R46420.

> Cable section (mm2): 120
> kvar (400 V): 147
> kvar (440 V): 175
> Optional circuit breaker (A) : 400
> Optional manual switch (A): 400
> Composition: 25 + 50 + 100
> Use voltage (V): 440

Description

The **OPTIM-EMK**-series capacitor banks have been designed for power factor correction in networks with fluctuating loads.

The power variations are relatively quick (measured in milliseconds) and the operation is thus carried out by thyristors, which are connected to a voltage controller board, so that the connection and disconnection of the capacitor is carried out with zero voltage difference.

Transients are prevented between the connection and disconnection of the steps, obtaining an immediate response to the load fluctuations.

Application

The most common application is with individual loads or in installations where a quick compensation response is needed (for ex., welding units, motors for lifting units, lifts, etc.)

Creation date: 24/11/2026 - CIRCUTOR, SAU reserves the right to make technical changes or modify the content/images of this document without prior notice, in order to improve its reliability, functionality, design or for other reasons.
It accepts no liability for any errors, inaccuracies or possible lack of information in this document.



OPTIM EMK4-175-440

Automatic capacitor banks with static system

Code: R46420.

Specifications

Electrical characteristics

Discharge resistance	75 V / 3 min
Surge	10 % 8 h over 24 h 15 % up to 15 min over 24 hours 20 % up to 5 min over 24 hours 30 % up to 1 min over 24 hours
Reinforcement voltage	440 V (400 V)
Voltage	400 V (other voltages on request)

Mechanical characteristics

Size (mm) width x height x depth	900 x 1900 x 650 (mm)
Thermal management	Natural or forced according to options
Fastening	Vertical. Minimum distance between condensers 2 cm
Weight (kg)	169

Environmental characteristics

Protection class	IP 21
Relative humidity (without condensation)	80%
Working temperature	T° class D: Daily average: 45 °C, annual average: 35 °C, maximum: 50 °C, minimum: -25 °C

Standards

Certifications	VDE 560
Electrical safety, Maximum height (m)	2000
Standards	IEC 60831-1, IEC 70/7, UNE-EN 20827, UNE-EN 20010, BS 1650

Current measurement circuit

Allowable overload	1,3 In
Permanent overload	1,3 In

Features / performance

Components	Three-phase measurement CLZ capacitor Static switching unit at each step, comprising static contactors (thyristors) Individual protection at each step via fuses with high cut-off power (APR), NH-00 or Neosted Series according to type Two-pole circuit breaker protection for battery and regulator operation Max Fast computer series reactive energy regulator Radiators for heat dissipation Thermostat built into the radiator itself to disconnect the step in case of high temperature (90 °C)
Optional	Manual circuit breaker at capacitor bank header Circuit breaker at capacitor bank header Circuit breaker + earth leakage protection at capacitor bank header Forced ventilation unit + thermostat Polycarbonate plate to avoid direct exposure 400/230 V autotransformer



OPTIM EMK4-175-440

Automatic capacitor banks with static system

Code: R46420.

OPTIM EMK
Automatic capacitor banks with static contactor, 50 Hz.

CODE	TYPE	kvar (400 V)	kvar (440 V)	Cable section (mm2)
OPTIM EMk4				
R46420.	OPTIM EMK4-175-440	147	175	120
R46422.	OPTIM EMK4-250-440	207	250	185
R46424.	OPTIM EMK4-300-440	248	300	240
R46425.	OPTIM EMK4-350-440	289	350	2x150
R46426.	OPTIM EMK4-400-440	331	400	2x185
OPTIM EMk6				
R46431.	OPTIM EMK6-400-440	331	400	2x185
R46435.	OPTIM EMK6-450-440	372	450	2x185
R46437.	OPTIM EMK6-550-440	455	550	2x240
R46438.	OPTIM EMK6-600-440	496	600	2x240
OPTIM EMk8				
R46442.	OPTIM EMK8-600-440	496	600	2x240
R46444.	OPTIM EMK8-650-440	537	650	3x150
R46450.	OPTIM EMK8-750-440	620	750	3x185
R46455.	OPTIM EMK8-800-440	661	800	2x240 / 240
OPTIM EMk10				
R46505.	OPTIM EMK10-850-440	702	850	2x240 / 240
R46604.	OPTIM EMK10-950-440	785	950	2x240 / 2x185
R46605.	OPTIM EMK10-1000-440	826	1000	2x240 / 2x185
OPTIM EMk12				
R46606.	OPTIM EMK12-1050-440	868	1050	2x240 / 2x240
R46608.	OPTIM EMK12-1150-440	950	1150	2x240 / 2x240
R46609.	OPTIM EMK12-1200-440	992	1200	2x240 / 2x240

Cable cross-section for installations with Un= 400 V. The installation company must ensure compliance with the low voltage directive at all times, in accordance with the characteristics of each installation and type of cable.

Creation date: 24/11/2026 - CIRCUTOR, SAU reserves the right to make technical changes or modify the content/images of this document without prior notice, in order to improve its reliability, functionality, design or for other reasons.
It accepts no liability for any errors, inaccuracies or possible lack of information in this document.



OPTIM EMK4-175-440

Automatic capacitor banks with static system

Code: R46420.

Dimensions

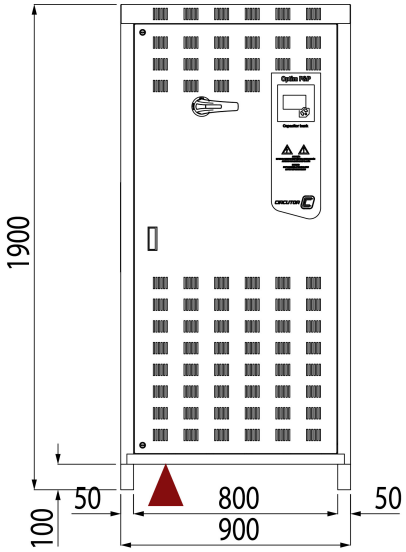

Connections

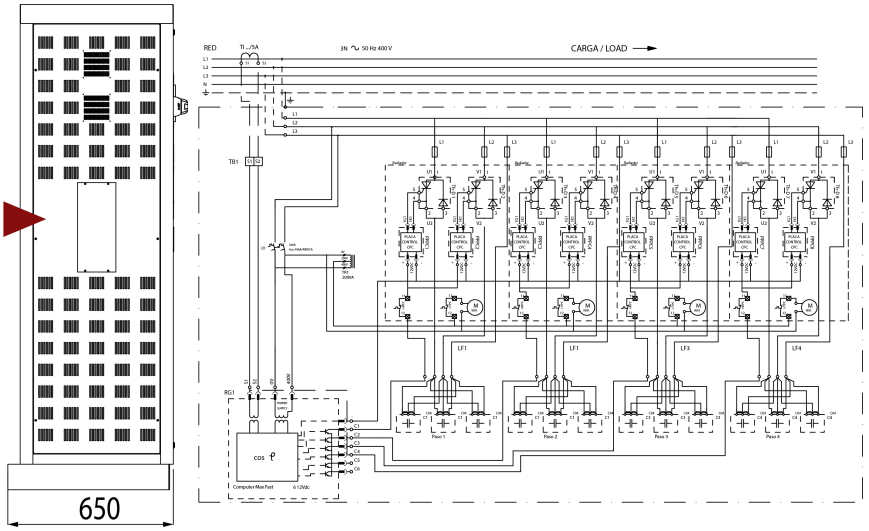

Creation date: 24/11/2026 - CIRCUTOR, SAU reserves the right to make technical changes or modify the content/images of this document without prior notice, in order to improve its reliability, functionality, design or for other reasons.
It accepts no liability for any errors, inaccuracies or possible lack of information in this document.