OPTIM 8 P&P-195-240-60Hz

OPTIM 8 P&P-195-240-60Hz, Automatic capacitor bank 60 Hz

Code: R3L4F4.

> Frequency (Hz): 60 Hz
> kvar (240 V): 195
> Aut.Switch (A): 3 x 630
> Composition: 15+6x30
> Mounting: Floor-mounted
> P%: 7

Description

The **OPTIM P&P** series automatic capacitor bank units have been designed for the automatic compensation of reactive energy in networks with fluctuating load levels and power variations during seconds, by switching operations carried out by contactors.

Application

Their simple installation, high-technology and robustness make the **OPTIM P&P** series the ideal unit for compensating reactive energy in installations with fluctuating load levels.

Creation date: 18/03/2026 - CIRCUTOR, SAU reserves the right to make technical changes or modify the content/images of this document without prior notice, in order to improve its reliability, functionality, design or for other reasons.
It accepts no liability for any errors, inaccuracies or possible lack of information in this document.

OPTIM 8 P&P-195-240-60Hz

Automatic capacitor banks

Code: R3L4F4.

Specifications

AC power supply

Frequency	60 Hz

Electrical characteristics

Losses (W)	< 0,5 W/kvar
Discharge resistance	75 V / 3 min
Surge	10 % 8 h over 24 h 15 % up to 15 min over 24 hours 20 % up to 5 min over 24 hours 30 % up to 1 min over 24 hours
Manoeuvre voltage	Contactors: 230 V
Tolerance C	-5% / 10 %

Mechanical characteristics

Size (mm) width x height x depth	1000 x 1750 x 440 (mm)
Envelope	Sheet metal RAL 7035 Grey / RAL 3005 Garnet
Thermal management	Natural or forced according to options
Fastening	Vertical / Self-supporting
Weight (kg)	155

Environmental characteristics

Protection class	IP 21
Relative humidity (without condensation)	80%
Working temperature	Tª class D: Daily average: 45 °C, annual average: 35 °C, maximum: 55 °C, minimum: -50 °C

Current measurement circuit

Permanent overload	1,3 In
Transformation ratio	In / 5A

Protection

Element	Fuses with high cut-off power (APR), type NH-00

OPTIM P&P 60Hz
Automatic capacitor banks, Plug & Play, 60 Hz.

CODE	TYPE	kvar (240 V)	Aut.Switch (A)	Composition	kvar (480 V)
OPTIM 5 P&P, automatic capacitor banks with computer SMART III regulator. Steps potections by Circuit Breaker					
R3L2F0.	OPTIM 5 P&P-25-240-60Hz	25	3 x 125	5+2x10	
R3L2F1.	OPTIM 5 P&P-43,75-240-60Hz	43,75	3 x 160	6,25+3x12,5	
R3L2F2.	OPTIM 5 P&P-56,25-240-60Hz	56,25	3 x 200	6,25+4x12,5	

Creation date: 18/03/2026 - CIRCUTOR, SAU reserves the right to make technical changes or modify the content/images of this document without prior notice, in order to improve its reliability, functionality, design or for other reasons.
It accepts no liability for any errors, inaccuracies or possible lack of information in this document.

OPTIM 8 P&P-195-240-60Hz

Automatic capacitor banks

Code: R3L4F4.

CODE	TYPE	kvar (240 V)	Aut.Switch (A)	Composition	kvar (480 V)
OPTIM 9 P&P, automatic capacitor banks with computer SMART III regulator. Steps protection by blade fuse type NH-00.					
R3L3F3.	OPTIM 9 P&P-72,5-240-60Hz	72,5	3 x 250	6x12,5	
R3L3F5.	OPTIM 9 P&P-87,5-240-60Hz	87,5	3 x 400	7x12,5	
R3L3F7.	OPTIM 9 P&P-100-240-60Hz	100	3 x 400	8x12,5	
R3L3F9.	OPTIM 9 P&P-112,5-240-60Hz	112,5	3 x 400	9x12,5	
OPTIM 8 P&P, automatic capacitor banks with computer SMART III regulator. Steps protection by blade fuse type NH-00.					
R3L4F1.	OPTIM 8 P&P-135-240-60Hz	135	3 x 630	15+4x30	
R3L4F2.	OPTIM 8 P&P-165-240-60Hz	165	3 x 630	15+5x30	
R3L4F4.	OPTIM 8 P&P-195-240-60Hz	195	3 x 630	15+6x30	
R3L4F6.	OPTIM 8 P&P-210-240-60Hz	210	3 x 800	7x30	
R3L4F8.	OPTIM 8 P&P-240-240-60Hz	240	3 x 800	8x30	
OPTIM 8L P&P, automatic capacitor banks with computer SMART III regulator. Steps protection by blade fuse type NH-00.					
R3L5F4.	OPTIM 8L P&P-260-240-60Hz	260	3 x 1000	20+6x40	
R3L5F8.	OPTIM 8L P&P-300-240-60Hz	300	3 x 1000	20+7x40	
R3L5F1.	OPTIM 8L P&P-320-240-60Hz	320	3 x 1250	8x40	
OPTIM 14L P&P, automatic capacitor banks with computer SMART III regulator. Steps protection by blade fuse type NH-00.					
R3L6F1.	OPTIM 14L P&P-360-240-60Hz	360	3 x 1250	9x40	
R3L6F3.	OPTIM 14L P&P-400-240-60Hz	400	3 x 1600	10x40	
R3L6F5.	OPTIM 14L P&P-440-240-60Hz	440	3 x 1600	11x40	
R3L6F8.	OPTIM 14L P&P-480-240-60Hz	480	3 x 1600	12x40	
OPTIM 5 P&P, automatic capacitor banks with computer SMART III regulator. General protection by Circuit Breaker					
R3L2D3.	OPTIM 5 P&P-50-480-60Hz		3 x 100	10+2x20	50
R3L2D6.	OPTIM 5 P&P-75-480-60Hz		3 x 125	2x12,5+2x25	75
R3L2D8.	OPTIM 5 P&P-100-480-60Hz		3 x 160	4x25	100
R3L2D1.	OPTIM 5 P&P-125-480-60Hz		3 x 200	5x25	125
OPTIM 9 P&P, automatic capacitor banks with computer SMART III regulator. Steps protection by blade fuse type NH-00.					
R3L3D0.	OPTIM 9 P&P-150-480-60Hz		3 x 250	6x25	150
R3L3D1.	OPTIM 9 P&P-162,5-480-60Hz		3 x 400	12,5+6x25	162,5
R3L3D2.	OPTIM 9 P&P-175-480-60Hz		3 x 400	7x25	175
R3L3D3.	OPTIM 9 P&P-187,5-480-60Hz		3 x 400	12,5+7x25	187,5
R3L3D5.	OPTIM 9 P&P-200-480-60Hz		3 x 400	8x25	200
R3L3DA.	OPTIM 9 P&P-212,5-480-60Hz		3 x 400	12,5+8x25	212,5
R3L3D7.	OPTIM 9 P&P-225-480-60Hz		3 x 400	9x25	225
OPTIM 8 P&P, automatic capacitor banks with computer SMART III regulator. Steps protection by blade fuse type NH-00.					
R3L4D1.	OPTIM 8 P&P-250-480-60Hz		3 x 400	5x50	250
R3L4D2.	OPTIM 8 P&P-275-480-60Hz		3 x 630	25+5x50	275
R3L4D7.	OPTIM 8 P&P-325-480-60Hz		3 x 630	25+6x50	325
R3L4D8.	OPTIM 8 P&P-350-480-60Hz		3 x 630	7x50	350
R3L4DA.	OPTIM 8 P&P-375-480-60Hz		3 x 630	25+7x50	375

Creation date: 18/03/2026 - CIRCUTOR, SAU reserves the right to make technical changes or modify the content/images of this document without prior notice, in order to improve its reliability, functionality, design or for other reasons.
It accepts no liability for any errors, inaccuracies or possible lack of information in this document.

OPTIM 8 P&P-195-240-60Hz

Automatic capacitor banks

Code: R3L4F4.

CODE	TYPE	kvar (240 V)	Aut.Switch (A)	Composition	kvar (480 V)
R3L4D4.	OPTIM 8 P&P-400-480-60Hz		3 x 800	8x50	400
OPTIM 8L P&P, automatic capacitor banks with computer SMART III regulator. Steps protection by blade fuse type NH-00.					
R3L5D0.	OPTIM 8L P&P-440-480-60Hz		3 x 800	40+5x80	440
R3L5D1.	OPTIM 8L P&P-520-480-60Hz		3 x 1000	40+6x80	520
R3L5D3.	OPTIM 8L P&P-600-480-60Hz		3 x 1000	40+7x80	600
R3L5D4.	OPTIM 8L P&P-640-480-60Hz		3 x 1250	8x80	640
OPTIM 14L P&P, automatic capacitor banks with computer SMART III regulator. Steps protection by blade fuse type NH-00.					
R3L6D0.	OPTIM 14L P&P-720-480-60Hz		3 x 1250	9x80	720
R3L6D3.	OPTIM 14L P&P-800-480-60Hz		3 x 1600	10x80	800
R3L6D5.	OPTIM 14L P&P-880-480-60Hz		3 x 1600	11x80	880
R3L6D7.	OPTIM 14L P&P-960-480-60Hz		3 x 1600	12x80	960

Creation date: 18/03/2026 - CIRCUTOR, SAU reserves the right to make technical changes or modify the content/images of this document without prior notice, in order to improve its reliability, functionality, design or for other reasons.
It accepts no liability for any errors, inaccuracies or possible lack of information in this document.

OPTIM 8 P&P-195-240-60Hz

Automatic capacitor banks

Code: R3L4F4.

Dimensions

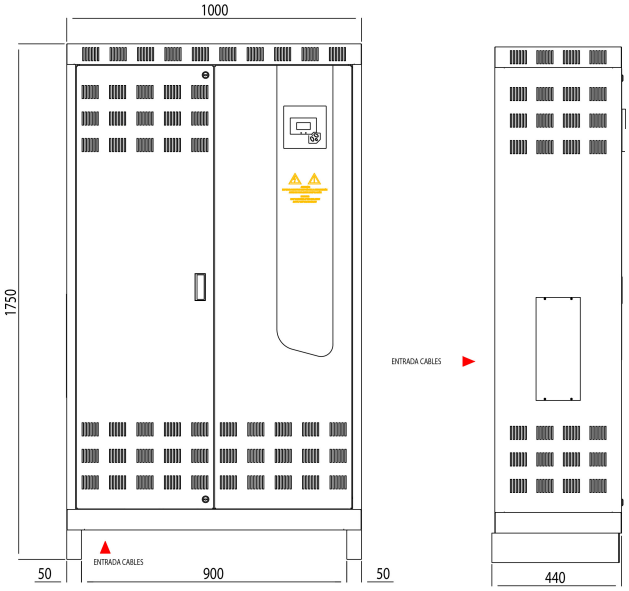

Connections

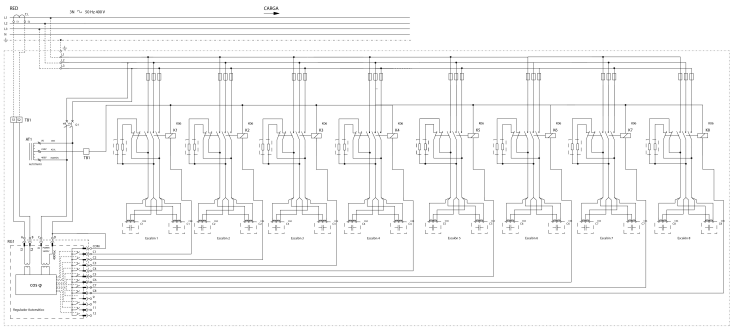

Creation date: 18/03/2026 - CIRCUTOR, SAU reserves the right to make technical changes or modify the content/images of this document without prior notice, in order to improve its reliability, functionality, design or for other reasons.
It accepts no liability for any errors, inaccuracies or possible lack of information in this document.