

OPTIM 3 P&P-12,5-440

OPTIM 3 P&P-12,5-440, Automatic capacitor bank

Code: R3L110.

> Cable section (mm2): 6
> Nr steps: 3
> kvar (400 V): 10
> kvar (440 V): 12,5
> Aut.Switch (A): Included
> Man.Switch (A): -
> Composition: 2,5+5+5
> Use voltage (V): 440
> Mounting: Wall-mounted

Description

The **OPTIM P&P** series automatic capacitor bank units have been designed for the automatic compensation of reactive energy in networks with fluctuating load levels and power variations during seconds, by switching operations carried out by contactors.

Application

Their simple installation, high-technology and robustness make the **OPTIM P&P** series the ideal unit for compensating reactive energy in installations with fluctuating load levels.



OPTIM 3 P&P-12,5-440

Automatic capacitor banks

Code: R3L110.

Specifications

AC power supply

Frequency	50 Hz

Electrical characteristics

Losses (W)	< 0,5 W/kvar
Discharge resistance	75 V / 3 min
Surge	10 % 8 h over 24 h 15 % up to 15 min over 24 hours 20 % up to 5 min over 24 hours 30 % up to 1 min over 24 hours
Manoeuvre voltage	Contactors: 230 V
Reinforcement voltage	440 V
Tolerance C	-5% / 10 %
Voltage	416 V (other voltages on request)

Mechanical characteristics

Size (mm) width x height x depth	400 x 600 x 260 (mm)
Envelope	Sheet metal RAL 7035 Grey / RAL 3005 Garnet
Thermal management	Natural or forced according to options
Fastening	Vertical / On wall
Weight (kg)	18

Environmental characteristics

Protection class	IP 21
Relative humidity (without condensation)	80%
Working temperature	Tª class D: Daily average: 45 °C, annual average: 35 °C, maximum: 55 °C, minimum: -50 °C

Current measurement circuit

Permanent overload	1,3 In
Transformation ratio	In/5 A

Standards

Electrical safety, Maximum height (m)	1000 máx. (para altitud mayor prever siempre ventilación forzada)
Standards	IEC 60831-1, IEC 61921, IEC 60439

Features / performance

Components	Reactive energy regulator, Computer C Wi-Fi, with digital indication and 6 or 12 relay outputs according to type.
Optional	Manual circuit breaker at capacitor bank header. Circuit breaker at capacitor bank header Circuit breaker + earth leakage protection at capacitor bank header. Forced ventilation unit + thermostat. Polycarbonate plate to avoid direct exposure. 400/230 V autotransformer (included in OPTIM 8, 9, 8L, 14L, and 16L) Regulator



OPTIM 3 P&P-12,5-440

Automatic capacitor banks

Code: R3L110.

with built-in network analyser and three-phase Computer SMART III measurement. Other frequencies, consult.

Protection

Element	Circuit breaker protection
Circuit breaker type	General built-in circuit breaker protection

OPTIM P&P

Automatic capacitor banks, 12.5 to 1600 kvar, 50 Hz.

CODE	TYPE	kvar (400 V)	kvar (440 V)	Nr steps	Cable section (mm2)
OPTIM 3 P&P, automatic capacitor banks with computer C Wi-Fi regulator					
R3L110.	OPTIM 3 P&P-12,5-440	10	12,5	3	6
R3L120.	OPTIM 3 P&P-17,5-440	14	17,5	3	6
R3L130.	OPTIM 3 P&P-25-440	20	25	3	10
R3L140.	OPTIM 3 P&P-31,25-440	26	31,25	3	10
R3L150.	OPTIM 3 P&P-37,5-440	31,25	37,5	3	16
R3L160.	OPTIM 3 P&P-43,75-440	36	43,75	3	25
R3L170.	OPTIM 3 P&P-52,5-440	43	52,5	3	25
R3L180.	OPTIM 3 P&P-62,5-440	51	62,5	3	35
OPTIM 5 P&P, automatic capacitor banks with computer C Wi-Fi regulator					
R3L210.	OPTIM 5 P&P-55-440	45	55	4	35
R3L220.	OPTIM 5 P&P-70-440	58	70	4	50
R3L230.	OPTIM 5 P&P-90-440	74	90	4	70
R3L240.	OPTIM 5 P&P-105-440	87	105	4	70
R3L250.	OPTIM 5 P&P-135-440	112	135	5	95
R3L260.	OPTIM 5 P&P-150-440	124	150	5	120
OPTIM 8 P&P, automatic capacitor banks with computer C Wi-Fi regulator. Built-in power supply autotransformer					
R3L410.	OPTIM 8 P&P-300-440	248	300	6	2x150
R3L420.	OPTIM 8 P&P-330-440	273	330	6	2x150
R3L430.	OPTIM 8 P&P-390-440	322	390	7	2x185
R3L440.	OPTIM 8 P&P-450-440	372	450	8	2x240
R3L450.	OPTIM 8 P&P-480-440	396	480	8	2x240
OPTIM 9 P&P, automatic capacitor banks with computer C Wi-Fi regulator. Built-in power supply autotransformer					
R3L310.	OPTIM 9 P&P-165-440	136	165	6	120
R3L320.	OPTIM 9 P&P-195-440	161	195	7	150
R3L330.	OPTIM 9 P&P-225-440	186	225	8	185
R3L340.	OPTIM 9 P&P-255-440	211	255	9	240
R3L350.	OPTIM 9 P&P-270-440	223	270	9	240
OPTIM 8L P&P, automatic capacitor banks with computer C Wi-Fi regulator. Built-in power supply autotransformer					



OPTIM 3 P&P-12,5-440

Automatic capacitor banks

Code: R3L110.

CODE	TYPE	kvar (400 V)	kvar (440 V)	Nr steps	Cable section (mm2)
R35L10.	OPTIM 8L P&P-550-440	454	550	6	2x240
R35L20.	OPTIM 8L P&P-650-440	537	650	7	3x150
R35L30.	OPTIM 8L P&P-750-440	620	750	8	3x185
R35L40.	OPTIM 8L P&P-800-440	661	800	8	3x185
OPTIM 14L P&P, automatic capacitor banks with computer C Wi-Fi regulator. Built-in power supply autotransformer					
R36L10.	OPTIM 14L P&P-900-440	743	900	10	3x150/185
R36L20.	OPTIM 14L P&P-950-440	785	950	10	3x185/185
R36L30.	OPTIM 14L P&P-1050-440	867	1050	11	3x185/240
R36L40.	OPTIM 14L P&P-1150-440	950	1150	12	3x185/2x150
R36L50.	OPTIM 14L P&P-1200-440	991	1200	12	3x185/2x185
R36L60.	OPTIM 14L P&P-1300-440	1074	1300	7	3x185/2x240
R36L70.	OPTIM 14L P&P-1400-440	1156	1400	8	3x185/3x120
OPTIM 16L P&P, automatic capacitor banks with computer C Wi-Fi regulator. Built-in power supply autotransformer					
R37L30.	OPTIM 16L P&P-1500-440	1239	1500	8	3x185/3x150
R37L40.	OPTIM 16L P&P-1600-440	1322	1600	9	3x185/3x185

Cable cross-section for installations with Un= 400 V. The installation company must ensure compliance with the low voltage directive at all times, in accordance with the characteristics of each installation and type of cable.
All batteries with **computer C Wi-Fi** regulator come with charge VAR system

Creation date: 23/11/2026 - CIRCUTOR, SAU reserves the right to make technical changes or modify the content/images of this document without prior notice, in order to improve its reliability, functionality, design or for other reasons.
It accepts no liability for any errors, inaccuracies or possible lack of information in this document.



OPTIM 3 P&P-12,5-440

Automatic capacitor banks

Code: R3L110.

Dimensions

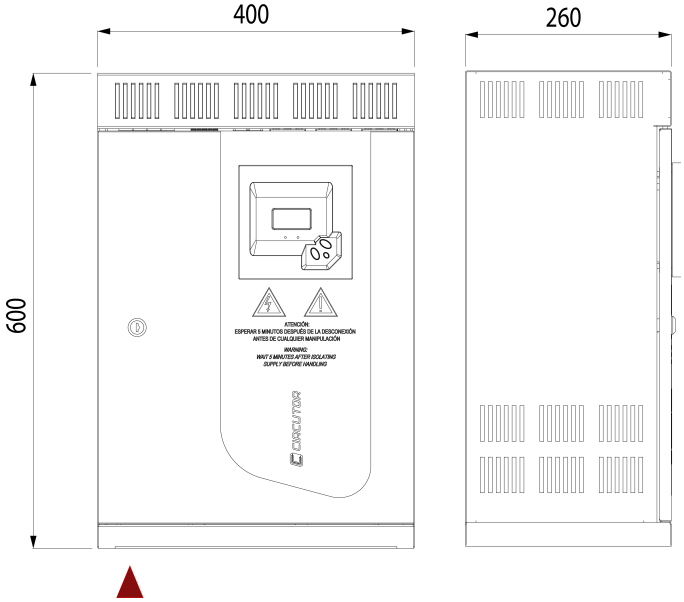

Connections

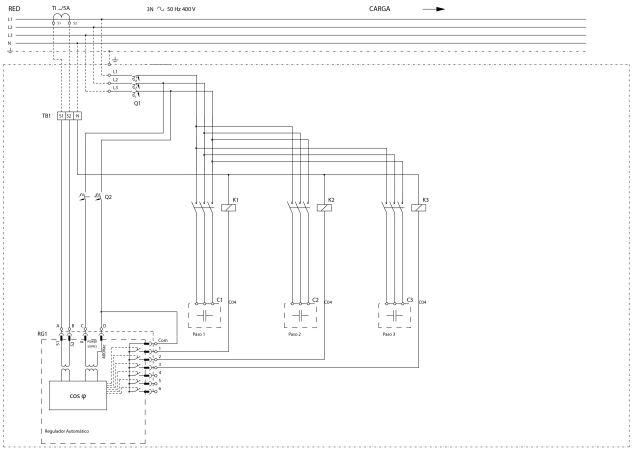

Creation date: 23/11/2026 - CIRCUTOR, SAU reserves the right to make technical changes or modify the content/images of this document without prior notice, in order to improve its reliability, functionality, design or for other reasons.
It accepts no liability for any errors, inaccuracies or possible lack of information in this document.