

CSB-F-10-440

CSB-F-10-440, Power capacitors with fuse protection

Code: R2395C. **DESCATALOGADO**

> Fuses (A): 25
> Cable section (mm2): 6
> kvar (400 V): 8
> kvar (440 V): 10
> Cut off power: 120 kA
> Use voltage (V): 440
> Type of protection: Fuse

Description

The application of new technologies have allowed CIRCUTOR to reinvent the classic **CS** capacitor.

The spirit of innovation and proprietary technology used during the design of the new **CSB** capacitor have increased the working life of conventional prismatic capacitors by over 60%. This new series has improved all aspects of the previous models, offering our customers a capacitor that is longer lasting, safer and more cost-efficient.

Application

Its application is mainly based on the compensation of transformers and motors. In general, they are used for the compensation of installations with constant loads.



CSB-F-10-440

Three-phase power capacitor with fuse protection.

Code: R2395C.

Specifications

AC power supply

Frequency	50 Hz

Electrical characteristics

Permanent overload	1,3 In
Losses (W)	Dielectric: < 0,2 W / kvar Total: < 0,5 W / kvar
Discharge resistance	75 V / 3 min
Surge	10%
Tolerance C	± 10 %
Voltage	440 V
Insulation voltage, circuit	3 / 15 kV

Mechanical characteristics

Size (mm) width x height x depth	140 x 381 x 280 (mm)
Envelope	Treated and painted steel in RAL 3005 colour
Thermal management	Natural or forced according to cabinet design
Fastening	Vertical / Horizontal. Minimum distance between condensers 4 cm
Weight (kg)	10

Environmental characteristics

Protection class	IP 42 with terminal cover
Relative humidity (without condensation)	80%
Working temperature	Tª class D: Daily average: 45 °C, annual average: 35 °C, maximum: 55 °C, minimum: -25 °C

Standards

Electrical safety, Maximum height (m)	2000
Standards	IEC 60831-1, UNE-EN 60831-1

Features / performance

Components	CS capacitor + general NH-00 type protection fuses with high cut-off power

Protection

Circuit breaker type	Dielectric regeneration Internal fuse Overpressure system Vermiculite

CSB-F
Power capacitors with fuse protection, 50 Hz.

Creation date: 24/11/2026 - CIRCUTOR, SAU reserves the right to make technical changes or modify the content/images of this document without prior notice, in order to improve its reliability, functionality, design or for other reasons.
It accepts no liability for any errors, inaccuracies or possible lack of information in this document.



CSB-F-10-440

Three-phase power capacitor with fuse protection.

Code: R2395C.

CODE	TYPE	kvar (400 V)	kvar (440 V)	Use voltage (V)
440 V, 50 Hz				
R23958.	CSB-F-5-440	4	5	440
R2395D.	CSB-F-12,5-440	10	12,5	440
R2395E.	CSB-F-15-440	12,5	15	440
R2395F.	CSB-F-20-440	17	20	440
R2395G.	CSB-F-25-440	21	25	440
R2395H.	CSB-F-30-440	25	30	440
R2395J.	CSB-F-37,5-440	31	37,5	440
R2395K.	CSB-F-50-440	42	50	440
R2395L.	CSB-F-60-440	50	60	440
R2395P.	CSB-F-75-440	63	75	440

Creation date: 24/11/2026 - CIRCUTOR, SAU reserves the right to make technical changes or modify the content/images of this document without prior notice, in order to improve its reliability, functionality, design or for other reasons.
It accepts no liability for any errors, inaccuracies or possible lack of information in this document.



CSB-F-10-440

Three-phase power capacitor with fuse protection.

Code: R2395C.

Dimensions

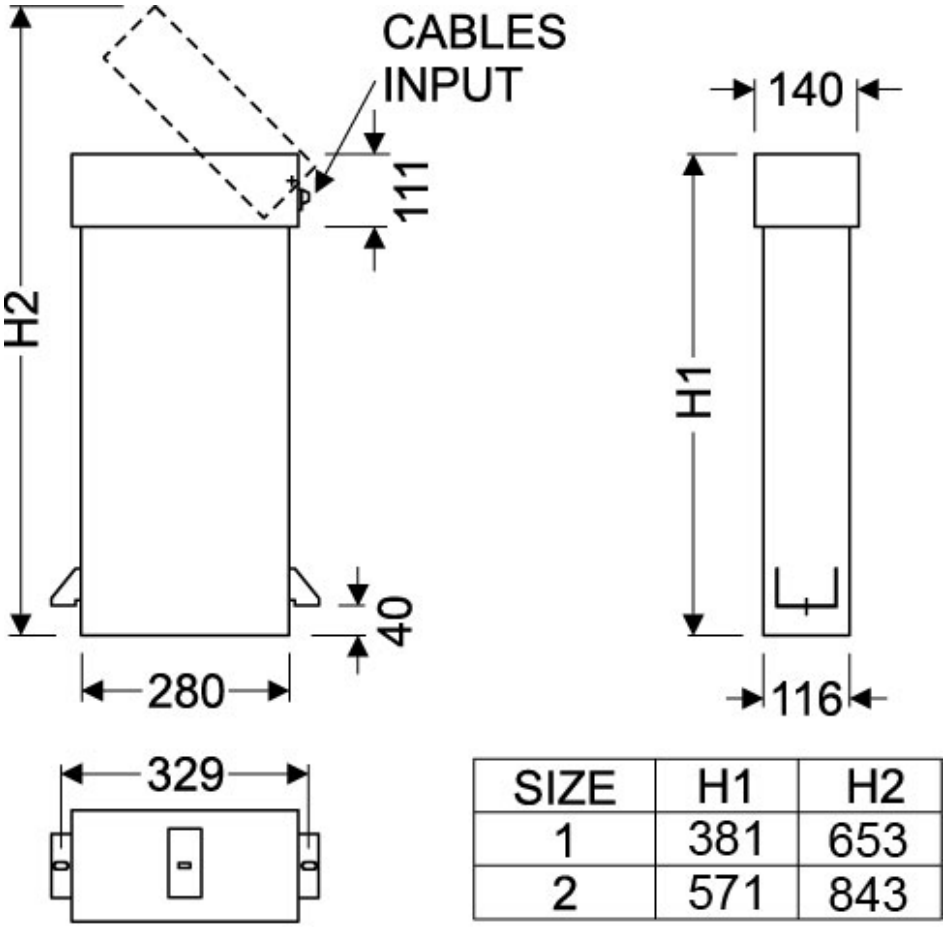

SIZE	H1	H2
1	381	653
2	571	843