

# CSB-M-15-440

CSB-M-15-440, Power capacitors with circuit breaker protection

Code: R2394E.

> Cable section (mm2): 6
> kvar (400 V): 12,5
> kvar (440 V): 15
> Cut off power: 6 kA
> Aut.Switch (A): 32
> Use voltage (V): 440
> Type of protection: Circuit breaker

## Description

The application of new technologies have allowed CIRCUTOR to reinvent the classic **CS** capacitor, manufactured for more than 35 years.

The spirit of innovation and proprietary technology used during the design of the new **CSB** capacitor have increased the working life of conventional prismatic capacitors by over 60%. This new series has improved all aspects of the previous models, offering our customers a capacitor that is longer lasting, safer and more cost-efficient.

## Application

Its application is mainly based on the compensation of transformers and motors. In general, they are used for the compensation of installations with constant loads.



# CSB-M-15-440

Three-phase power capacitor with circuitbreaker protection

Code: R2394E.

## Specifications

### AC power supply

| | |
|---|---|
| Frequency | 50 Hz |

### Electrical characteristics

| | |
|---|---|
| Permanent overload | 1,3 In |
| Losses (W) | Dielectric: < 0,2 W / kvar Total: < 0,5 W / kvar |
| Discharge resistance | 75 V / 3 min |
| Surge | 10% |
| Tolerance C | ± 10 % |
| Voltage | 440 V |
| Insulation voltage, circuit | 3 / 15 kV |

### Mechanical characteristics

| | |
|---|---|
| Size (mm) width x height x depth | 140 x 381 x 280 (mm) |
| Envelope | Treated and painted steel in RAL 3005 colour |
| Thermal management | Natural or forced according to cabinet design |
| Fastening | Vertical / Horizontal. Minimum distance between condensers 4 cm |
| Weight (kg) | 5,3 |

### Environmental characteristics

| | |
|---|---|
| Protection class | IP 42 with terminal cover |
| Relative humidity (without condensation) | 80% |
| Working temperature | Tª class D: Daily average: 45 °C, annual average: 35 °C, maximum: 55 °C, minimum: -25 °C |

### Standards

| | |
|---|---|
| Electrical safety, Maximum height (m) | 2000 |
| Standards | IEC 60831-1, UNE-EN 60831-1 |

### Features / performance

| | |
|---|---|
| Components | CSB capacitor General three-pole circuit breaker protection |

### Protection

| | |
|---|---|
| Circuit breaker type | Dielectric regeneration Internal fuse Overpressure system Vermiculite |

**CSB-M**
Power capacitors with miniature circuit breaker protection, 50 Hz


Creation date: 23/11/2026 - CIRCUTOR, SAU reserves the right to make technical changes or modify the content/images of this document without prior notice, in order to improve its reliability, functionality, design or for other reasons.
It accepts no liability for any errors, inaccuracies or possible lack of information in this document.



# CSB-M-15-440

Three-phase power capacitor with circuitbreaker protection

Code: R2394E.

| CODE | TYPE | kvar (400 V) | kvar (440 V) | Use voltage (V) |
|---|---|---|---|---|
| **440 Vac, 50 Hz** | | | | |
| R23948. | CSB-M-5-440 | 4 | 5 | 440 |
| R2394A. | CSB-M-7,5-440 | 6 | 7,5 | 440 |
| R2394C. | CSB-M-10-440 | 8 | 10 | 440 |
| R2394D. | CSB-M-12,5-440 | 10 | 12,5 | 440 |
| R2394E. | CSB-M-15-440 | 12,5 | 15 | 440 |
| R2394F. | CSB-M-20-440 | 17 | 20 | 440 |
| R2394G. | CSB-M-25-440 | 21 | 25 | 440 |
| R2394H. | CSB-M-30-440 | 25 | 30 | 440 |
| R2394J. | CSB-M-37,5-440 | 31 | 37,5 | 440 |
| R2394K. | CSB-M-50-440 | 42 | 50 | 440 |
| R2394L. | CSB-M-60-440 | 50 | 60 | 440 |
| R2394M. | CSB-M-75-440 | 66 | 75 | 440 |


Creation date: 23/11/2026 - CIRCUTOR, SAU reserves the right to make technical changes or modify the content/images of this document without prior notice, in order to improve its reliability, functionality, design or for other reasons.
It accepts no liability for any errors, inaccuracies or possible lack of information in this document.



# CSB-M-15-440

Three-phase power capacitor with circuitbreaker protection

Code: R2394E.

## Dimensions

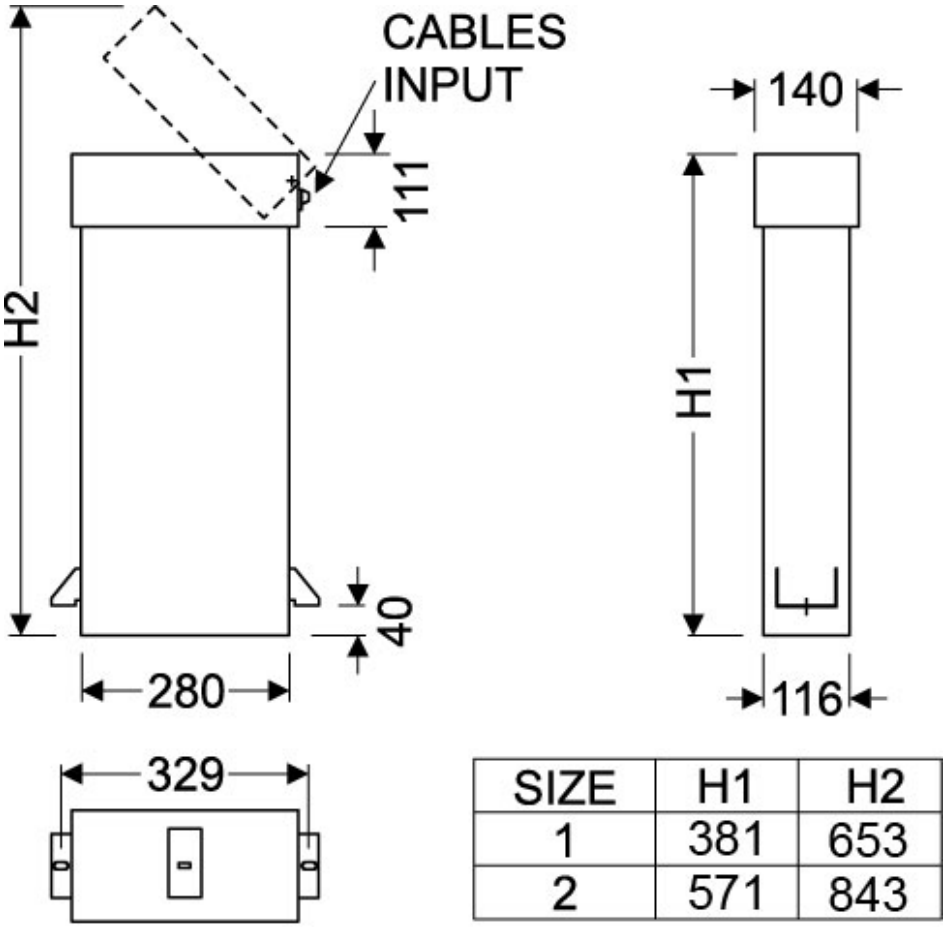


| SIZE | H1 | H2 |
|---|---|---|
| 1 | 381 | 653 |
| 2 | 571 | 843 |