

CSB-23/12,5

CSB-23/12,5, Power capacitor

Code: R2321D.

> kvar 50 Hz: 12.5
> kvar 60 Hz: 15
> Use voltage (V): 230

Description

The application of new technologies have allowed CIRCUTOR to reinvent the classic **CS** capacitor.

The spirit of innovation and proprietary technology used during the design of the new **CSB** capacitor have increased the working life of conventional prismatic capacitors by over 60%. This new series has improved all aspects of the previous models, offering our customers a capacitor that is longer lasting, safer and more cost-efficient.

Application

Its application is based on compensation in installations with static and variable loads (capacitor banks).

Creation date: 23/11/2026 - CIRCUTOR, SAU reserves the right to make technical changes or modify the content/images of this document without prior notice, in order to improve its reliability, functionality, design or for other reasons.
It accepts no liability for any errors, inaccuracies or possible lack of information in this document.



CSB-23/12,5

State-of-the-art three-phaseprismatic power capacitors

Code: R2321D.

Specifications

AC power supply

Frequency	50 ó 60 Hz

Electrical characteristics

Permanent overload	1,3 In
Losses (W)	Dielectric: < 0,2 W / kvar Total: < 0,4 W / kvar
Discharge resistance	75 V / 3 min
Surge	10 % 8 h over 24 h 15 % up to 15 min over 24 hours 20 % up to 5 min over 24 hours 30 % up to 1 min over 24 hours
Tolerance C	-5 ... +15 %
Voltage	230 V
Insulation voltage, circuit	3 / 15 kV

Mechanical characteristics

Size (mm) width x height x depth	360 x 330 x 120 (mm)
Envelope	Treated and painted steel in RAL 3005 colour
Thermal management	Natural or forced depending on the cabinet
Fastening	Vertical / Horizontal. Minimum distance between condensers 4 cm
Weight (kg)	7,5

Environmental characteristics

Protection class	IP 42 with terminal cover
Relative humidity (without condensation)	80%
Working temperature	Tª class D: Daily average: 45 °C, annual average: 35 °C, maximum: 55 °C, minimum: -25 °C

Standards

Electrical safety, Maximum height (m)	2000
Standards	IEC 60831-1, UNE-EN 60831-1

Protection

Circuit breaker type	Dielectric regeneration Internal fuse Overpressure system Vermiculite

CSB

Power capacitors for LV

CODE	TYPE	kvar 50 Hz	kvar 60 Hz	Use voltage (V)
230 Vac				
R2321C.	CSB-23/10	10	12.5	230

Creation date: 23/11/2026 - CIRCUTOR, SAU reserves the right to make technical changes or modify the content/images of this document without prior notice, in order to improve its reliability, functionality, design or for other reasons.
It accepts no liability for any errors, inaccuracies or possible lack of information in this document.



CSB-23/12,5

State-of-the-art three-phaseprismatic power capacitors

Code: R2321D.

CODE	TYPE	kvar 50 Hz	kvar 60 Hz	Use voltage (V)
R2321D.	CSB-23/12,5	12.5	15	230
R2321E.	CSB-23/15	15	17.5	230
R2321F.	CSB-23/20	20	25	230
R2321G.	CSB-23/25	25	30	230
R2321H.	CSB-23/30	30	35	230
R2321J.	CSB-23/40	40	50	230
R2321K.	CSB-23/50	50	60	230
400 Vac				
R2323E.	CSB-40/15	15	17.5	400
R2323F.	CSB-40/20	20	25	400
R2323G.	CSB-40/25	25	30	400
R2323H.	CSB-40/30	30	35	400
R2323J.	CSB-40/40	40	50	400
R2323K.	CSB-40/50	50	60	400
R2323L.	CSB-40/60	60	70	400
R2323Q.	CSB-40/80	80	95	400
R2323R.	CSB-40/100	100	120	400
440 Vac				
R2324E.	CSB-44/15	15	17.5	440
R2324F.	CSB-44/20	20	25	440
R2324G.	CSB-44/25	25	30	440
R2324H.	CSB-44/30	30	35	440
R2324J.	CSB-44/40	40	50	440
R2324K.	CSB-44/50	50	60	440
R2324L.	CSB-44/60	60	70	440
R2324Q.	CSB-44/80	80	95	440
R2324R.	CSB-44/100	100	120	440
460 Vac				
R2325E.	CSB-46/15	15	17.5	460
R2325F.	CSB-46/20	20	25	460
R2325G.	CSB-46/25	25	30	460
R2325H.	CSB-46/30	30	35	460
R2325J.	CSB-46/40	40	50	460
R2325K.	CSB-46/50	50	60	460
R2325L.	CSB-46/60	60	70	460
R2325Q.	CSB-46/80	80	95	460
R2325R.	CSB-46/100	100	120	460
525 Vac				
R2326C.	CSB-52/10	10	12.5	525



CSB-23/12,5

State-of-the-art three-phaseprismatic power capacitors

Code: R2321D.

CODE	TYPE	kvar 50 Hz	kvar 60 Hz	Use voltage (V)
R2326E.	CSB-52/15	15	17.5	525
R2326F.	CSB-52/20	20	25	525
R2326G.	CSB-52/25	25	30	525
R2326H.	CSB-52/30	30	35	525
R2326J.	CSB-52/40	40	50	525
R2326K.	CSB-52/50	50	60	525
R2326L.	CSB-52/60	60	70	525
R2326M.	CSB-52/70	70	85	525
690 Vac				
R232BC.	CSB-69/10	10	12.5	690
R232BE.	CSB-69/15	15	17.5	690
R232BF.	CSB-69/20	20	25	690
R232BG.	CSB-69/25	25	30	690
R232BH.	CSB-69/30	30	35	690
R232BJ.	CSB-69/40	40	50	690
R232BK.	CSB-69/50	50	60	690
R232BL.	CSB-69/60	60	70	690
R232BQ.	CSB-69/80	80	95	690
R232BR.	CSB-69/100	100	0	690
1100 Vac for LV networks				
R2327C.	CSB-110/10	10	12	1100
R2327F.	CSB-110/20	20	24	1100
R2327H.	CSB-110/30	30	36	1100
R2327J.	CSB-110/40	40	48	1100
R2327K.	CSB-110/50	50	60	1100
R2327L.	CSB-110/60	60	72	1100
R2327M.	CSB-110/70	70	84	1100

1100 VAC for low-voltage networks (≤ 1000 VAC)



CSB-23/12,5

State-of-the-art three-phaseprismatic power capacitors

Code: R2321D.

Dimensions

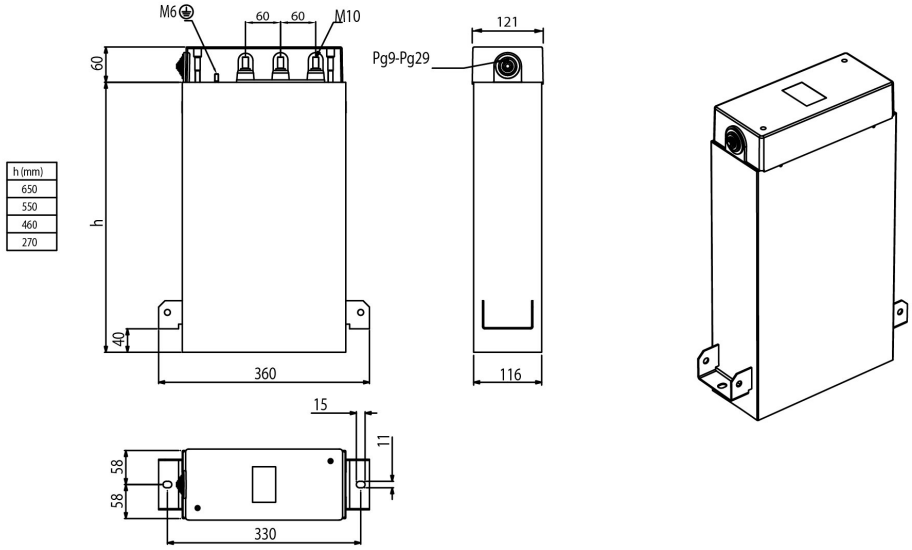

Creation date: 23/11/2026 - CIRCUTOR, SAU reserves the right to make technical changes or modify the content/images of this document without prior notice, in order to improve its reliability, functionality, design or for other reasons.
It accepts no liability for any errors, inaccuracies or possible lack of information in this document.