,

Code:

Description

The **CIRWATT B101** invoicing meter is a single-phase meter for residential use. It is IEC certified to invoice electricity to end users. It features Class-1 accuracy for active energy and up to 3 programmable tariffs.
The meter has a load profile with more than 400 days of data, 12 end-of-billing periods and the option to record any tampering or fraud in a special event and service quality file.
For easier reading, these meters have a backlit display that makes it easy to see the electricity consumption in places with low lighting.

Application

Official electricity meter via on-screen verification or by data download via optical port.

The device has, depending on the version, a digital input for forced tariff changes, especially designed for installations with dual supply sources, accumulating in tariff 1 the energy from the grid and in tariff 2 the power from the second source based on the status of the digital input.

Depending on the version, the meter can be integrated with LM devices via pulse output to collect pulses, which allow the energy consumption to be centralized and sent remotely to the PowerStudio data management system.

Creation date: 28/11/2026 - CIRCUTOR, SAU reserves the right to make technical changes or modify the content/images of this document without prior notice, in order to improve its reliability, functionality, design or for other reasons.
It accepts no liability for any errors, inaccuracies or possible lack of information in this document.



Code:

Specifications

AC power supply

Tolerance	80 % ... 115 % Un
Consumption	< 2 W; < 10 VA
Frequency	50 / 60 Hz
Nominal voltage	230 V

Battery specification

Performance-guarantee	> 20 years @ 30 °C
Type	Lithium

Mechanical characteristics

Size (mm) width x height x depth	129 x 215 x 62 (mm)
Envelope	DIN 43859

Environmental characteristics

Relative humidity (without condensation)	95 % max.
Storage temperature	-40 ... +85 °C
Working temperature	-40 ... +70 °C

Voltage measurement circuit

Connection	Asymmetrical or Symetrical
Consumption	< 2 W; 10 VA
Nominal frequency	50 / 60 Hz
Nominal voltage	230 V

Current measurement circuit

Reference current (Iref)	5 A
Maximum current	65 A
Minimum current measurement	250 mA

Communication Network

Protocol	230 V

Optical communication interface

Protocol	IEC 62056-21 mode C
Type	Serial;bi-directional

User interface

Resolution of the display	up to 7 digits
Display type	LCD

Creation date: 28/11/2026 - CIRCUTOR, SAU reserves the right to make technical changes or modify the content/images of this document without prior notice, in order to improve its reliability, functionality, design or for other reasons.
It accepts no liability for any errors, inaccuracies or possible lack of information in this document.



Code:

Memory

Memory capacity	Up to 4 tariffs, optional load profile, 9600 records for load profiles
Type	FIFO

Measurement accuracy

Reactive energy measurement (kvarh)	IEC 62053-21 (Class 2)
Active energy measurement (kWh)	Class 1 - IEC 62053-21 Class B - EN 50470

Features / performance

Billing closures	15

Creation date: 28/11/2026 - CIRCUTOR, SAU reserves the right to make technical changes or modify the content/images of this document without prior notice, in order to improve its reliability, functionality, design or for other reasons.
It accepts no liability for any errors, inaccuracies or possible lack of information in this document.



Code:

Dimensions

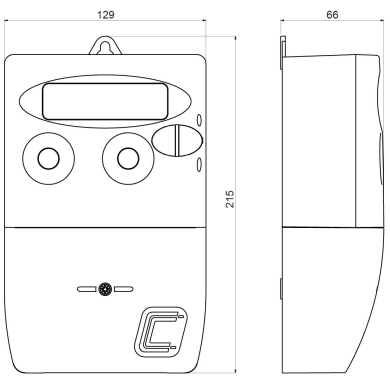

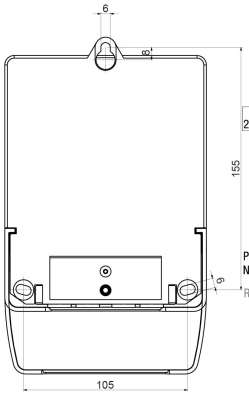

Connections

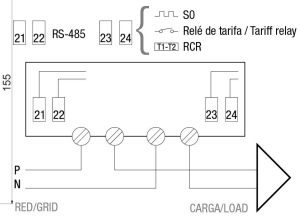

Creation date: 28/11/2026 - CIRCUTOR, SAU reserves the right to make technical changes or modify the content/images of this document without prior notice, in order to improve its reliability, functionality, design or for other reasons.
It accepts no liability for any errors, inaccuracies or possible lack of information in this document.