,

Code:

Specifications

Mechanical characteristics

Size (mm) width x height x depth	145 x 110 x 86 (mm)
Weight (kg)	5

kit3-TRMC210
Kit of 3 current transformers for energy meters, primary winding

CODE	TYPE
Q30901.	TRMC 210 -0.5S-3X100/5
Q30902.	TRMC 210 -0.5S-3X150/5
Q30903.	TRMC 210 -0.5S-3X200/5
Q30904.	TRMC 210 -0.5S-3X300/5
Q30905.	TRMC 210 -0.5S-3X400/5
Q30906.	TRMC 210 -0.5S-3X500/5
Q30907.	TRMC 210 -0.5S-3X600/5
Q309010000001	TRMC 210 -0.5S-3X100/5
Q309020000001	TRMC 210 -0.5S-3X150/5
Q309030000001	TRMC 210 -0.5S-3X200/5
Q309040000001	TRMC 210 -0.5S-3X300/5
Q309050000001	TRMC 210 -0.5S-3X400/5
Q309060000001	TRMC 210 -0.5S-3X500/5
Q309070000001	TRMC 210 -0.5S-3X600/5

Check availability.../1 A

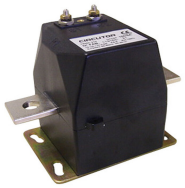

Code:

Dimensions

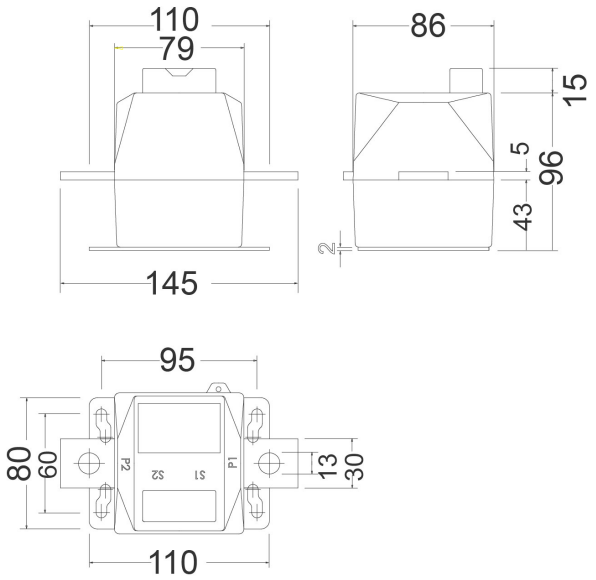

Connections

