,

Code:

## Specifications

### Mechanical characteristics

| | |
|---|---|
| Size (mm) width x height x depth | 145 x 110 x 86 (mm) |
| Weight (kg) | 4,9 |

**kit3-TRMC210**
Kit of 3 current transformers for energy meters, primary winding

| CODE | TYPE |
|---|---|
| Q30901. | TRMC 210 -0.5S-3X100/5 |
| Q30902. | TRMC 210 -0.5S-3X150/5 |
| Q30903. | TRMC 210 -0.5S-3X200/5 |
| Q30904. | TRMC 210 -0.5S-3X300/5 |
| Q30905. | TRMC 210 -0.5S-3X400/5 |
| Q30906. | TRMC 210 -0.5S-3X500/5 |
| Q30907. | TRMC 210 -0.5S-3X600/5 |
| Q309010000001 | TRMC 210 -0.5S-3X100/5 |
| Q309020000001 | TRMC 210 -0.5S-3X150/5 |
| Q309030000001 | TRMC 210 -0.5S-3X200/5 |
| Q309040000001 | TRMC 210 -0.5S-3X300/5 |
| Q309050000001 | TRMC 210 -0.5S-3X400/5 |
| Q309060000001 | TRMC 210 -0.5S-3X500/5 |
| Q309070000001 | TRMC 210 -0.5S-3X600/5 |

Check availability.../1 A

Creation date: 24/11/2026 - CIRCUTOR, SAU reserves the right to make technical changes or modify the content/images of this document without prior notice, in order to improve its reliability, functionality, design or for other reasons.
It accepts no liability for any errors, inaccuracies or possible lack of information in this document.

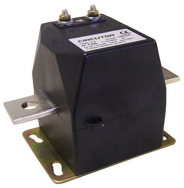

Code:

## Dimensions

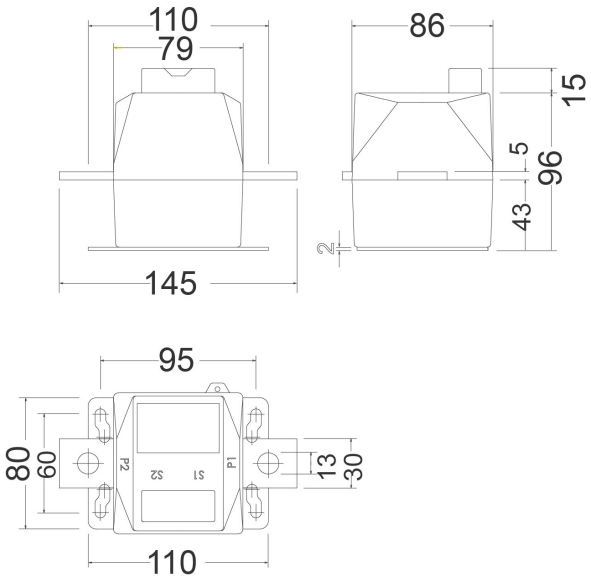


## Connections

