

CEM-C31-485-T1

CEM-C31-485-T1, Indirect three-phase energy meter with communications

Code: Q23521. **CONSULTAR DISPONIBILIDAD**

> Protocol: Modbus RTU
> Módules: 4
> Tariff: 1
> Certification: IEC
> Communications: RS-485
> Transistor output: 1
> System: Three-phase
> Measure: Indirect
> Measurement Range (V): 3 x 57/100...3 x 230/400
> Measurement Range (A): .../ 5 (10) A
> Max. Current (A): 10

Description

Three-phase electrical energy meter with indirect measurement, 5(10)A (, CEM-C31), direct measurement 65 A (CEM-C21) or single-phase energy meter (CEM-C10).
Built-in LCD display (7 digits) with rotating screen system. It can have integrated RS-485 communications, depending on the model.. Also features
2 buttons (1 sealable button) for viewing all the measured information.
Other features include:

- MID certification, module B+D (depending on the type)
- Class 1 active energy (Class B, in accordance with MID), Class 2 reactive energy
- Complies with the EN 50470 (MID European standards) or IEC 62052-11 standards (international standards), depending on the type.
- Compact size (CEM-C10: 2 modules, 36 mm, CEM-C21 y CEM-C31: 4 modules, 72 mm)
- Resettable partial meter
- 1 programmable impulse output, in accordance with DIN 43864 (CEM-C10, CEM-C31-T1, CEM-C21-T1 models)
- 1 Digital input for Tariff selection and impulse count (CEM-C31-D, CEM-C21-DS)
- Indicates bad connections on the screen
- Energy storage, even in the case of bad connections

Application

- Redundant meter for verifying the energy allocated by the energy provider.
- Energy consumption report sent to a remote system (PLC/BMS).
- Cost control for achieving a high consumption/unit ratio in industrial processes.
- Display of electrical parameters (V, A, kW, kW·h, PF, etc.), per phase and three-phase.



CEM-C31-485-T1

Energy meter for DIN rail mounting

Code: Q23521.

Specifications

AC power supply

Installation category	CAT III 300 V
Consumption	< 2 W, 10 VA
Frequency	50/60 Hz
Nominal voltage	230 V ~ (± 20 %)

Mechanical characteristics

Size (mm) width x height x depth	70 x 90 x 64 (mm)
Weight (kg)	0,185

Environmental characteristics

Relative humidity (without condensation)	5 ... 95 %

Current measurement circuit

Consumption	0.3 VA ... 10 A
Reference current (Iref)	5 A
Maximum current	10 A
Minimum current measurement	0.050 A
Transition current	0.25 A

Voltage measurement circuit

Consumption	< 2W , < 10VA (In, Vref)
Nominal frequency	50 / 60 Hz
Nominal voltage	3 x 127/220 ... 3 x 230/400 V ~

Electrical characteristics

Insulation voltage, circuit	4 kV RMS 50 Hz durante 1 min

Standards

Electrical safety, Maximum height (m)	2000
Standards	EN 50470-1, EN 50470-3, IEC 62053-21, IEC 62053-23

User interface

LED	2 LED: kWh, 20000 imp/kW, kvarh, 20000 imp/kvarh
Keyboard	2 Keys
Display type	LCD
Maximum value	999999.9 kWh

Creation date: 24/11/2026 - CIRCUTOR, SAU reserves the right to make technical changes or modify the content/images of this document without prior notice, in order to improve its reliability, functionality, design or for other reasons.
It accepts no liability for any errors, inaccuracies or possible lack of information in this document.



CEM-C31-485-T1

Energy meter for DIN rail mounting

Code: Q23521.

Digital transistor outputs

Quantity	1

Creation date: 24/11/2026 - CIRCUTOR, SAU reserves the right to make technical changes or modify the content/images of this document without prior notice, in order to improve its reliability, functionality, design or for other reasons.
It accepts no liability for any errors, inaccuracies or possible lack of information in this document.



CEM-C31-485-T1

Energy meter for DIN rail mounting

Code: Q23521.

Type	Optocoupler
Pulse output, time period (Ton / Toff)	Ton: 200 ms
Maximum current	50 mA
Maximum voltage	24 Vcc

Measurement accuracy

Reactive energy measurement (kvarh)	Class 2.0 (IEC 62053-23)
Active energy measurement (kWh)	Class 1 (IEC 62053-21)

Serial communication

Protocol	Modbus RTU
Technology / Type	RS-485

CEM-C10 and CEM-C21/C31 without built-in RS-485 communications can optionally communicate with CEM-M-ETH and CEM-M-RS485 modules.
Devices with absolute measurements (Abs). For 2 or 4 quadrants, see the Aditional table
Frecuency: 50/60 Hz. Parameters: V, A, kW, kVA, kWh, cos phi

CEM-XXX-TI encoding table - Devices with pulse output (transistor)
CEM-XXX-DS-Devices with digital input for tariff change and impulse meter

Creation date: 24/11/2026 - CIRCUTOR, SAU reserves the right to make technical changes or modify the content/images of this document without prior notice, in order to improve its reliability, functionality, design or for other reasons.
It accepts no liability for any errors, inaccuracies or possible lack of information in this document.



CEM-C31-485-T1

Energy meter for DIN rail mounting

Code: Q23521.

Dimensions

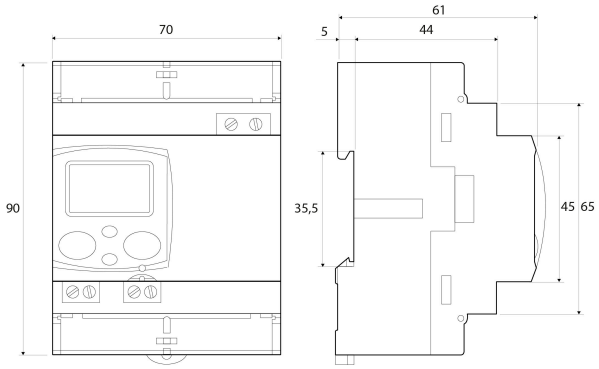

Connections

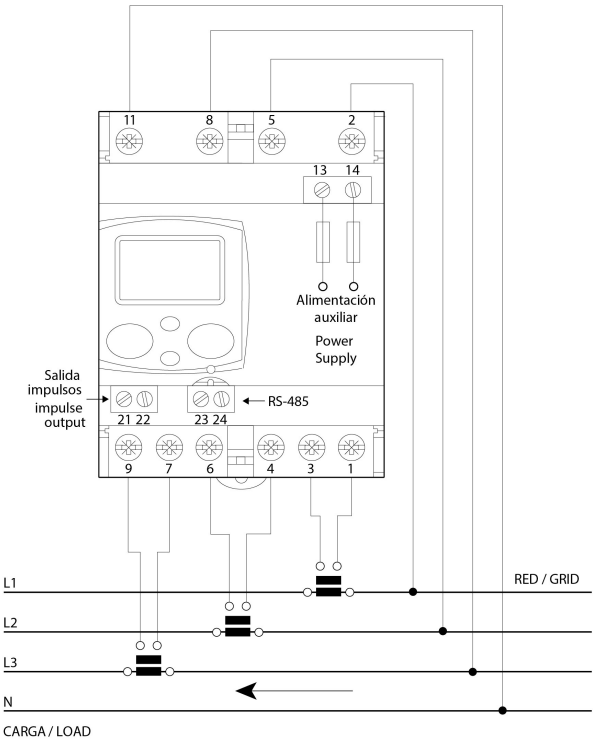

Creation date: 24/11/2026 - CIRCUTOR, SAU reserves the right to make technical changes or modify the content/images of this document without prior notice, in order to improve its reliability, functionality, design or for other reasons.
It accepts no liability for any errors, inaccuracies or possible lack of information in this document.