

RBEZ-40-400

RBEZ-40-400, Reactor

Code: P73240.

> L(mH): 2,84
> For capacitor: CFB-46/50-6B
> In (A): 35 A
> Frequency (Hz): 50
> kvar (400 V): 40
> Losses: 179

Description

CIRCUTOR has standardised the reactors of the REZ / RBEZ series for their use in static capacitor banks. The best operation of the unit requires the reactors to be connected within the triangle made p of the capacitor-reactor group. At the same power rating, the REZ / RBEZ reactors have a nominal current value that is 1.73 times lower and an inductance value that is 3 times higher than that in an RZ / RBZ reactor. There is a standard range of 400 V rejection reactors with p = 7%, with a resonance frequency of 189 Hz for 50 Hz networks (or 227 Hz on demand for 60 Hz networks). In addition, reactors can be manufactured on demand for static capacitor banks adapted to any value of the power rating, p%, voltage and frequency. REZ-type low-power reactors are built with low-loss plates and are coiled with copper wire. The connection is made using suitable terminals. In the case of higher power ratings, RBEZ reactors are used, with a magnetic plate nucleus and multiple air gaps, which offer excellent features and a low loss ratio. The coils are made with an aluminium band (or copper band, on demand). The input and output connections run through a busbar. Both REZ and RBEZ type reactors are impregnated with a varnish in a vacuum to increase insulation and reduce noise levels.

Application

The rejection reactors of the REZ / RBEZ series have been specifically designed for use in static capacitor banks in installations with a high harmonic content. The reactors must be connected in series with each capacitor for adequate protection of the capacitors and the static operations module, and to avoid resonance effects in the installation.



RBEZ-40-400

Three-phase reactors for static capacitor banks

Code: P73240.

Specifications

AC power supply

Frequency	50 Hz (Bajo demanda: 60 Hz)

Electrical characteristics

Permanent overload	1,17 In
Linearity (5% L)	1,8 In
Maximum transient current	2 In (1 min)
Voltage	400 V,on request: up to 1000 V
Tolerance L	± 5 %
L value (mH)	2.84
Insulation voltage, circuit	4 kV

Electrical characteristic

Overvoltage factor (p %)	7 % (189 Hz)

Mechanical characteristics

Size (mm) width x height x depth	180 x 235 x 300 (mm)
Envelope	Conductor type: copper wire
Weight (kg)	25

Environmental characteristics

Thermal Class	"class F (+155 °C) On request: class H (+180 °C)"
Protection class	IP 00
Installation, location, position.	Inside
Ambient temperature	-10 ... +45 °C

Standards

Standards	UNE-EN 60289, IEC 60076

Protection

Circuit breaker type	90°C NC thermostat

REZ-RBEZ

Reactors III for detuned static filters for FRE static switching bank

CODE	TYPE	L(mH)	For capacitor	In (A)	Frequency (Hz)	kvar (400 V)	Losses	P%
400 V, 50 Hz, f resonance = 189 Hz / p= 7%								

Creation date: 24/11/2026 - CIRCUTOR, SAU reserves the right to make technical changes or modify the content/images of this document without prior notice, in order to improve its reliability, functionality, design or for other reasons.
It accepts no liability for any errors, inaccuracies or possible lack of information in this document.



RBEZ-40-400

Three-phase reactors for static capacitor banks

Code: P73240.

CODE	TYPE	L(mH)	For capacitor	In (A)	Frequency (Hz)	kvar (400 V)	Losses	P%
P73210.	REZ-5-400	23,67	CFB-46/6-6B	5 A	50	5	63	7%
P73215.	REZ-10-400	11,27	CFB-46/12,5-6B	9 A	50	10	69	7%
P73220.	REZ-15-400	7,5	CFB-46/19-6B	13 A	50	15	70	7%
P73225.	REZ-20-400	5,68	CFB-46/25-6B	17 A	50	20	91	7%
P73230.	REZ-25-400	4,68	CFB-46/30-6B	21 A	50	25	110	7%
P73235.	REZ-30-400	3,84	CFB-46/37-6B	26 A	50	30	109	7%
P73240.	RBEZ-40-400	2,84	CFB-46/50-6B	35 A	50	40	179	7%
P73245.	RBEZ-50-400	2,29	CFB-46/62-6B	42 A	50	50	189	7%
P73250.	RBEZ-60-400	1,89	CFB-46/74-6B	51 A	50	60	252	7%
P73255.	RBEZ-80-400	1,42	CFB-46/100-6B	68 A	50	80	263	7%

Creation date: 24/11/2026 - CIRCUTOR, SAU reserves the right to make technical changes or modify the content/images of this document without prior notice, in order to improve its reliability, functionality, design or for other reasons.
It accepts no liability for any errors, inaccuracies or possible lack of information in this document.



RBEZ-40-400

Three-phase reactors for static capacitor banks

Code: P73240.

Dimensions

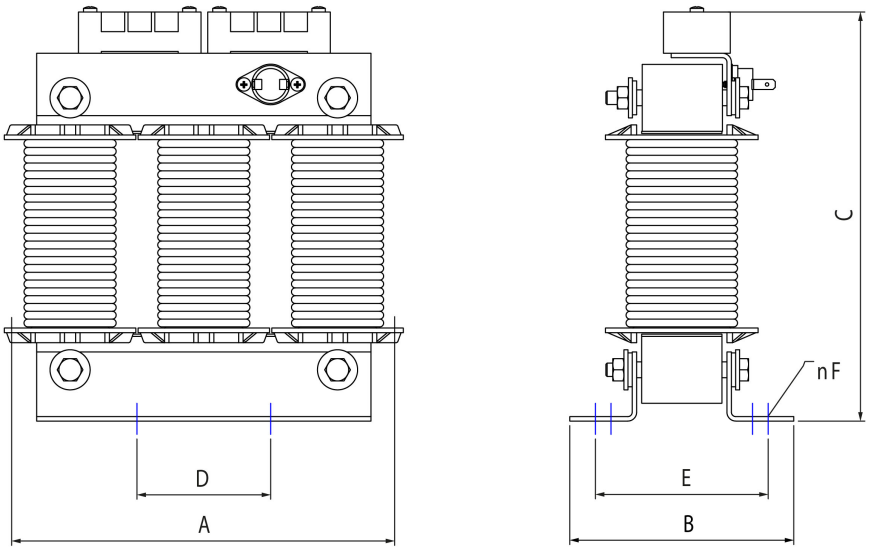

Tipo	A mm	B mm	C mm	D* mm	E* mm	F mm	G mm	kg
RZ-5-400	155	76	165	75	55	7	-	4
RZ-6,24-400	180	112	190	90	75	7	-	6
RZ-10-400	180	112	190	90	75	7	-	6,5
RZ-12,5-400	180	112	190	90	75	7	-	7
RZ-15-400	180	112	190	90	75	7	-	8

Tipo	A mm	B mm	C mm	D* mm	E* mm	F mm	G mm	kg
REZ-05-400	150	90	155	75	70	7	-	4
REZ-10-400	180	110	195	90	83	7	-	7
REZ-15-400	180	120	195	90	93	7	-	9
REZ-20-400	250	130	245	130	98	7	-	15
REZ-25-400	250	130	245	130	98	7	-	16
REZ-30-400	250	130	245	130	98	7	-	17

* Distance between fixations

Creation date: 24/11/2026 - CIRCUTOR, SAU reserves the right to make technical changes or modify the content/images of this document without prior notice, in order to improve its reliability, functionality, design or for other reasons.
It accepts no liability for any errors, inaccuracies or possible lack of information in this document.