

TRP100 2500/5A 5P10

TRP100 2500/5A 5P10, Protection transformers encapsulated in resin

Code: P50347.

> Usefull diam.(mm): 100
> Accuracy: 5P10
> Measurement Range (A): 2500/5
> Power (VA): 15

Specifications

Mechanical characteristics

Size (mm) width x height x depth	190 x 230 x 66 (mm)
Weight (kg)	3,9

TRP
Protection transformers encapsulated in resin

CODE	TYPE	Usefull diam.(mm)	Measurement Range (A)
TRP40			
P50311.	TRP40 100/5A 5P10	40	100/5
P50312.	TRP40 150/5A 5P10	40	150/5
P50313.	TRP40 200/5A 5P10	40	200/5
P50314.	TRP40 250/5A 5P10	40	250/5
P50315.	TRP40 300/5A 5P10	40	300/5
P50316.	TRP40 400/5A 5P10	40	400/5
P50317.	TRP40 500/5A 5P10	40	500/5
P50211.	TRP40 100/5A 5P20	40	100/5
P50212.	TRP40 150/5A 5P20	40	150/5
P50213.	TRP40 200/5A 5P20	40	200/5
P50214.	TRP40 250/5A 5P20	40	250/5
P50215.	TRP40 300/5A 5P20	40	300/5
P50216.	TRP40 400/5A 5P20	40	400/5
P50217.	TRP40 500/5A 5P20	40	500/5
TRP60			
P50321.	TRP60 150/5A 5P10	60	150/5
P50322.	TRP60 200/5A 5P10	60	200/5
P50323.	TRP60 250/5A 5P10	60	250/5
P50324.	TRP60 300/5A 5P10	60	300/5
P50325.	TRP60 400/5A 5P10	60	400/5
P50326.	TRP60 500/5A 5P10	60	500/5
P50327.	TRP60 600/5A 5P10	60	600/5
P50328.	TRP60 750/5A 5P10	60	750/5
P50329.	TRP60 1000/5A 5P10	60	1000/5

Creation date: 25/11/2026 - CIRCUTOR, SAU reserves the right to make technical changes or modify the content/images of this document without prior notice, in order to improve its reliability, functionality, design or for other reasons.
It accepts no liability for any errors, inaccuracies or possible lack of information in this document.



TRP100 2500/5A 5P10

Code: P50347.

CODE	TYPE	Usefull diam.(mm)	Measurement Range (A)
P50221.	TRP60 150/5A 5P20	60	150/5
P50222.	TRP60 200/5A 5P20	60	200/5
P50223.	TRP60 250/5A 5P20	60	250/5
P50224.	TRP60 300/5A 5P20	60	300/5
P50225.	TRP60 400/5A 5P20	60	400/5
P50226.	TRP60 500/5A 5P20	60	500/5
P50227.	TRP60 600/5A 5P20	60	600/5
P50228.	TRP60 750/5A 5P20	60	750/5
P50229.	TRP60 1000/5A 5P20	60	1000/5
TRP80			
P50331.	TRP80 250/5A 5P10	80	250/5
P50332.	TRP80 300/5A 5P10	80	300/5
P50333.	TRP80 400/5A 5P10	80	400/5
P50334.	TRP80 500/5A 5P10	80	500/5
P50335.	TRP80 600/5A 5P10	80	600/5
P50336.	TRP80 800/5A 5P10	80	800/5
P50337.	TRP80 1000/5A 5P10	80	1000/5
P50338.	TRP80 1200/5A 5P10	80	1200/5
P50339.	TRP80 1500/5A 5P10	80	1500/5
P50231.	TRP80 250/5A 5P20	80	250/5
P50232.	TRP80 300/5A 5P20	80	300/5
P50233.	TRP80 400/5A 5P20	80	400/5
P50234.	TRP80 500/5A 5P20	80	500/5
P50235.	TRP80 600/5A 5P20	80	600/5
P50236.	TRP80 800/5A 5P20	80	800/5
P50237.	TRP80 1000/5A 5P20	80	1000/5
P50238.	TRP80 1200/5A 5P20	80	1200/5
P50239.	TRP80 1500/5A 5P20	80	1500/5
TRP100			
P50341.	TRP100 750/5A 5P10	100	750/5
P50342.	TRP100 1000/5A 5P10	100	1000/5
P50343.	TRP100 1200/5A 5P10	100	1200/5
P50344.	TRP100 1500/5A 5P10	100	1500/5
P50346.	TRP100 2000/5A 5P10	100	2000/5
P50347.	TRP100 2500/5A 5P10	100	2500/5
P50348.	TRP100 3000/5A 5P10	100	3000/5
P50241.	TRP100 750/5A 5P20	100	750/5
P50242.	TRP100 1000/5A 5P20	100	1000/5
P50243.	TRP100 1200/5A 5P20	100	1200/5
P50244.	TRP100 1500/5A 5P20	100	1500/5

Creation date: 25/11/2026 - CIRCUTOR, SAU reserves the right to make technical changes or modify the content/images of this document without prior notice, in order to improve its reliability, functionality, design or for other reasons.
It accepts no liability for any errors, inaccuracies or possible lack of information in this document.



TRP100 2500/5A 5P10

Code: P50347.

CODE	TYPE	Usefull diam.(mm)	Measurement Range (A)
P50246.	TRP100 2000/5A 5P20	100	2000/5
P50247.	TRP100 2500/5A 5P20	100	2500/5
P50248.	TRP100 3000/5A 5P20	100	3000/5
TRP140			
P50351.	TRP140 1000/5A 5P10	140	1000/5
P50352.	TRP140 1250/5A 5P10	140	1250/5
P50353.	TRP140 1500/5A 5P10	140	1500/5
P50354.	TRP140 2000/5A 5P10	140	2000/5
P50355.	TRP140 2500/5A 5P10	140	2500/5
P50356.	TRP140 3000/5A 5P10	140	3000/5
P50357.	TRP140 4000/5A 5P10	140	4000/5
P50251.	TRP140 1000/5A 5P20	140	1000/5
P50252.	TRP140 1250/5A 5P20	140	1250/5
P50253.	TRP140 1500/5A 5P20	140	1500/5
P50254.	TRP140 2000/5A 5P20	140	2000/5
P50255.	TRP140 2500/5A 5P20	140	2500/5
P50256.	TRP140 3000/5A 5P20	140	3000/5
P50257.	TRP140 4000/5A 5P20	140	4000/5
TRP180			
P50361.	TRP180 1500/5A 5P10	180	1500/5
P50362.	TRP180 2000/5A 5P10	180	2000/5
P50363.	TRP180 2500/5A 5P10	180	2500/5
P50364.	TRP180 3000/5A 5P10	180	3000/5
P50365.	TRP180 4000/5A 5P10	180	4000/5
P50366.	TRP180 5000/5A 5P10	180	5000/5
P50261.	TRP180 1500/5A 5P20	180	1500/5
P50262.	TRP180 2000/5A 5P20	180	2000/5
P50263.	TRP180 2500/5A 5P20	180	2500/5
P50264.	TRP180 3000/5A 5P20	180	3000/5
P50265.	TRP180 4000/5A 5P20	180	4000/5
P50266.	TRP180 5000/5A 5P20	180	5000/5

Please contact us for other values. TO ENCODE OTHER PARAMETERS, see the table at the end of the section



TRP100 2500/5A 5P10

Code: P50347.

Dimensions

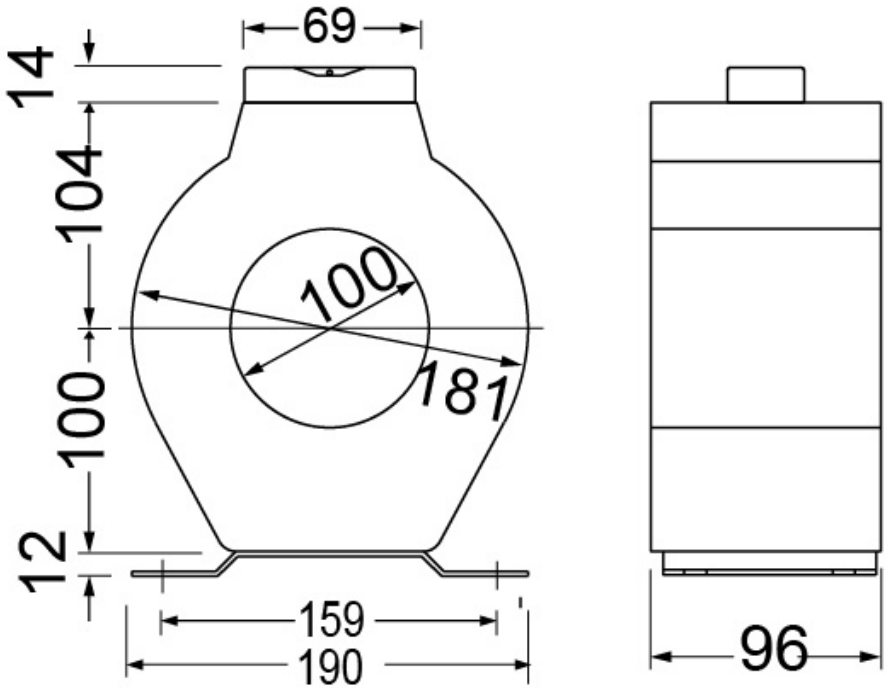

Creation date: 25/11/2026 - CIRCUTOR, SAU reserves the right to make technical changes or modify the content/images of this document without prior notice, in order to improve its reliability, functionality, design or for other reasons.
It accepts no liability for any errors, inaccuracies or possible lack of information in this document.