

TRM80 500/5A

TRM80 500/5A, Measuring transformers encapsulated in resin

Code: P50131.

> Inner diameter (mm): 80
> System: Single-phase
> Class 0,5 Power (VA): 5
> Measurement Range (A): 500/5
> Input current: 500 A
> Transformer type: Encapsulated in resin

Description

Resin-coated current transformer, busbar. Other characteristics:

- From 75 to 5000 A
- Inner diameter from 30 to 180 mm, according to type
- Secondary .../5 A (.../1 A on request)

Application

These transformers have been conceived to convert nominal currents in any installation to current values adjusted to measurement devices. Its synthetic resin increases its resistance to adverse environmental conditions.



TRM80 500/5A

Measuring transformers encapsulated in resin

Code: P50131.

Specifications

Electrical characteristics

Power	5 VA (Class 0,5)
Insulation voltage between terminals S1-S2	3 kV

Mechanical characteristics

Size (mm) width x height x depth	135 x 178 x 36 (mm)
Envelope	Self-extinguishing V0, synthetic resin
Weight (kg)	1,25

Environmental characteristics

Thermal Class	Class B (+130 °C)

Specific technical characteristics of current sensors

Inner diameter Ø (mm)	80
Operating voltage	0,72 kV~ max.

Current measurement circuit

Nominal frequency	50 / 60 Hz
Primary current measurement	500 A
Dynamic current (Idyn)	2,5 Ith
Thermal short-circuit current (Ith)	60 In
Transformation ratio	... / 5 A

Standards

Standards	IEC 60044-1 / UNE EN 60044-1

TRM
Measuring transformers encapsulated in resin

CODE	TYPE	Measurement Range (A)	Inner diameter (mm)	Class 0,5 Power (VA)	Class 1 Power (VA)
TRM30					
P50101.	TRM30 75/5A	75/5	30	-	2
P50102.	TRM30 100/5A	100/5	30	-	5
P50103.	TRM30 150/5A	150/5	30	-	5
P50104.	TRM30 200/5A	200/5	30	10	-
P50105.	TRM30 250/5A	250/5	30	15	-
P50106.	TRM30 300/5A	300/5	30	20	-



TRM80 500/5A

Measuring transformers encapsulated in resin

Code: P50131.

CODE	TYPE	Measurement Range (A)	Inner diameter (mm)	Class 0,5 Power (VA)	Class 1 Power (VA)
P50107.	TRM30 400/5A	400/5	30	25	-
TRM40					
P50111.	TRM40 150/5A	150/5	40	5	-
P50112.	TRM40 200/5A	200/5	40	7,5	-
P50113.	TRM40 250/5A	250/5	40	10	-
P50114.	TRM40 300/5A	300/5	40	15	-
P50115.	TRM40 400/5A	400/5	40	20	-
P50116.	TRM40 500/5A	500/5	40	25	-
P50117.	TRM40 600/5A	600/5	40	30	-
P50118.	TRM40 800/5A	800/5	40	35	-
TRM60					
P50121.	TRM60 250/5A	250/5	60	5	-
P50122.	TRM60 300/5A	300/5	60	7,5	-
P50123.	TRM60 400/5A	400/5	60	10	-
P50124.	TRM60 500/5A	500/5	60	15	-
P50125.	TRM60 600/5A	600/5	60	20	-
P50126.	TRM60 800/5A	800/5	60	25	-
P50127.	TRM60 1000/5A	1000/5	60	30	-
P50128.	TRM60 1200/5A	1200/5	60	35	-
TRM80					
P50131.	TRM80 500/5A	500/5	80	5	-
P50132.	TRM80 600/5A	600/5	80	7,5	-
P50133.	TRM80 750/5A	750/5	80	10	-
P50134.	TRM80 1000/5A	1000/5	80	15	-
P50135.	TRM80 1500/5A	1500/5	80	20	-
P50136.	TRM80 2000/5A	2000/5	80	25	-
P50137.	TRM80 2500/5A	2500/5	80	30	-
TRM100					
P50141.	TRM100 750/5A	750/5	100	15	-
P50142.	TRM100 1000/5A	1000/5	100	20	-
P50144.	TRM100 1500/5A	1500/5	100	20	-
P50145.	TRM100 2000/5A	2000/5	100	20	-
P50146.	TRM100 2500/5A	2500/5	100	20	-
P50147.	TRM100 3000/5A	3000/5	100	25	-
TRM140					
P50151.	TRM140 1000/5A	1000/5	140	15	-
P50152.	TRM140 1250/5A	1250/5	140	20	-
P50153.	TRM140 1500/5A	1500/5	140	25	-

Creation date: 24/11/2026 - CIRCUTOR, SAU reserves the right to make technical changes or modify the content/images of this document without prior notice, in order to improve its reliability, functionality, design or for other reasons.
It accepts no liability for any errors, inaccuracies or possible lack of information in this document.



TRM80 500/5A

Measuring transformers encapsulated in resin

Code: P50131.

CODE	TYPE	Measurement Range (A)	Inner diameter (mm)	Class 0,5 Power (VA)	Class 1 Power (VA)
P50154.	TRM140 2000/5A	2000/5	140	30	-
P50155.	TRM140 2500/5A	2500/5	140	35	-
P50156.	TRM140 3000/5A	3000/5	140	35	-
P50157.	TRM140 4000/5A	4000/5	140	35	-
TRM180					
P50161.	TRM180 1250/5A	1250/5	180	15	-
P50162.	TRM180 1500/5A	1500/5	180	20	-
P50163.	TRM180 2000/5A	2000/5	180	20	-
P50164.	TRM180 2500/5A	2500/5	180	20	-
P50165.	TRM180 3000/5A	3000/5	180	20	-
P50166.	TRM180 4000/5A	4000/5	180	20	-
P50167.	TRM180 5000/5A	5000/5	180	20	-

For other configurations see table of additional features

Creation date: 24/11/2026 - CIRCUTOR, SAU reserves the right to make technical changes or modify the content/images of this document without prior notice, in order to improve its reliability, functionality, design or for other reasons.
It accepts no liability for any errors, inaccuracies or possible lack of information in this document.

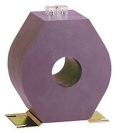

TRM80 500/5A

Measuring transformers encapsulated in resin

Code: P50131.

Dimensions

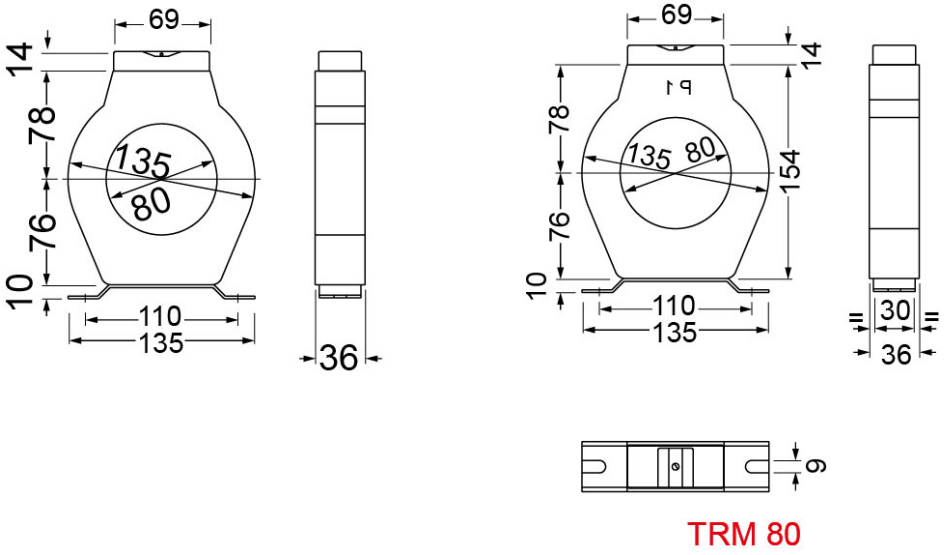

Creation date: 24/11/2026 - CIRCUTOR, SAU reserves the right to make technical changes or modify the content/images of this document without prior notice, in order to improve its reliability, functionality, design or for other reasons.
It accepts no liability for any errors, inaccuracies or possible lack of information in this document.