

RECmax MP-C4-6

RECmax MP-C4-6, Motorized circuit breaker,4-pole C-curve

Code: P27120.

> Poles: 4
> In (A): 6 A
> Curve: C

Description

The **RECmax MP** series are motorized circuit breakers that can be linked remotely. They offer protection against short-circuits and overloads, and can also be used as a circuit breaker. After a disconnection caused by a circuit breaker, the switch can be reconnected by an external order. It has two inputs which, via voltage-free external signals, order the opening (input O) and subsequent closing (reclosing) of the circuit breaker (input I). It also features two single-contact outputs for signalling the status and the cause of the opening and closing of the circuit breaker (trip, manual/test).

Application

The **RECmax MP** series are motorized circuit breakers that can be controlled remotely, suitable for any application in which remote control of connection/disconnection is required.

They are also used as circuit breakers linked to **CIRCUTOR** self-reclosing relays. They are an essential accessory for automatic circuit breaker and residual current reclosing and protection.



RECmax MP-C4-6

Motorised circuit breaker (up to 63 A)

Code: P27120.

Specifications

AC power supply

Installation category	CAT III 300 V
Consumption	4,5 VA
Frequency	50 / 60 Hz.
Nominal voltage	230V ~ ± 30%

Mechanical characteristics

Size (mm) width x height x depth	115 x 110 x 83 (mm)
Envelope	Plastic V0 polycarbonate + GF
Fastening	DIN 46277 (EN 50022)
Weight (kg)	0,652

Environmental characteristics

Protection class	Motor: IP 40 (DIN 40050) / RECmax MP: IP 20
Relative humidity (without condensation)	5 ...95 %
Working temperature	-20 ... +70 °C

Standards

Electrical safety, Maximum height (m)	2000
Standards	IEC 60898, IEC 60947-2

Motor

Frequency (Hz)	50 / 60
Absorbed power	10 VA
Tripping / motor reclosure time	< 10 ms / < 1000 ms
On / off pulse time	> 10 ms / > 10 ms
Maximum voltage	420 V ~
Minimum voltage	90 V ~
Nominal voltage	230 V ~ ± 30 %
Electrical life	> 20000 operations

Digital relay outputs

Nominal current	0,25 A
Type	Simple contacts
Nominal voltage	230 V ~

Thermal-magnetic protection

Trip curve, Type	C
Nominal current In (A)	6



RECmax MP-C4-6

Motorised circuit breaker (up to 63 A)

Code: P27120.

Number of mechanical / electrical manoeuvres	> 20000 / 10000
Rated short-circuit breaking capacity (Icn) / service short-circuit breaking capacity (Ics) (IEC 60898)	6 kA
Voltage breaking capacity (IEC 60898)	230 / 400 V ~
AC ultimate short-circuit breaking capacity (Icu) (IEC 60947-2)	10 kA
V~ Breaking capacity (IEC 60947-2)	415 V ~
Minimum operating voltage UB min (V)	12 V ~
Nominal voltage	240 / 415 V ~

RECmaxMP
Motorized MCB with reclosing (up to 63 A)

CODE	TYPE	Poles	In (A)	Curve
2 Poles, C Curve				
P27110.	RECmax MP-C2-6	2	6 A	C
P27312.	RECmax MP-C2-16	2	16 A	C
P27113.	RECmax MP-C2-20	2	20 A	C
P27314.	RECmax MP-C2-25	2	25 A	C
P27115.	RECmax MP-C2-32	2	32 A	C
P27116.	RECmax MP-C2-40	2	40 A	C
P27117.	RECmax MP-C2-50	2	50 A	C
P27118.	RECmax MP-C2-63	2	63 A	C
4 Poles, C Curve				
P27120.	RECmax MP-C4-6	4	6 A	C
P27322.	RECmax MP-C4-16	4	16 A	C
P27323.	RECmax MP-C4-20	4	20 A	C
P27124.	RECmax MP-C4-25	4	25 A	C
P27324.	RECmax MP-C4-25	4	25 A	C
P27127.	RECmax MP-C4-50	4	50 A	C
P27327.	RECmax MP-C4-50	4	50 A	C
P27328.	RECmax MP-C4-63	4	63 A	C
2 Poles, D Curve				
P27130.	RECmax MP-D2-6	2	6 A	D
P27331.	RECmax MP-D2-10	2	10 A	D
P27332.	RECmax MP-D2-16	2	16 A	D
P27333.	RECmax MP-D2-20	2	20 A	D
P27334.	RECmax MP-D2-25	2	25 A	D
P27336.	RECmax MP-D2-40	2	40 A	D
P27138.	RECmax MP-D2-63	2	63 A	D
4 Poles, D Curve				



RECmax MP-C4-6

Motorised circuit breaker (up to 63 A)

Code: P27120.

CODE	TYPE	Poles	In (A)	Curve
P27140.	RECmax MP-D4-6	4	6 A	D
P27141.	RECmax MP-D4-10	4	10 A	D
P27341.	RECmax MP-D4-10	4	10 A	D
P27342.	RECmax MP-D4-16	4	16 A	D
P27143.	RECmax MP-D4-20	4	20 A	D
P27344.	RECmax MP-D4-25	4	25 A	D
P27345.	RECmax MP-D4-32	4	32 A	D
P27146.	RECmax MP-D4-40	4	40 A	D
P27147.	RECmax MP-D4-50	4	50 A	D

C/D curve circuit breakers with 6 kA cut off power (IEC 60898). Consult 10 kA



RECmax MP-C4-6

Motorised circuit breaker (up to 63 A)

Code: P27120.

Dimensions

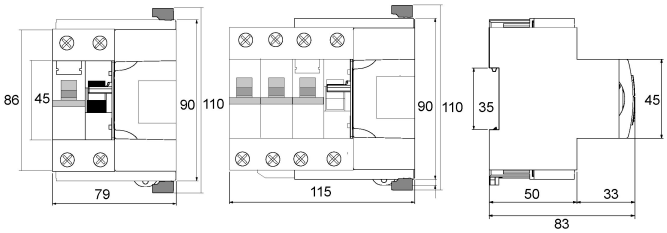

Connections

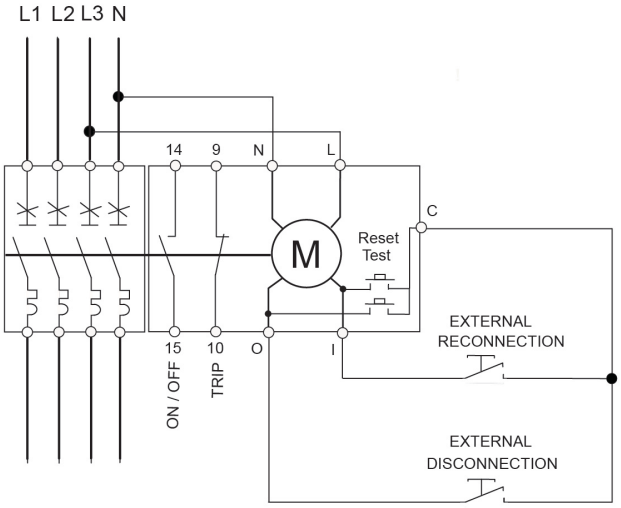

Creation date: 25/11/2026 - CIRCUTOR, SAU reserves the right to make technical changes or modify the content/images of this document without prior notice, in order to improve its reliability, functionality, design or for other reasons.
It accepts no liability for any errors, inaccuracies or possible lack of information in this document.