

REC4-2P-40-30

REC4-2P-40-30, RCCB with self-reclosing system, type A

Code: P26A21.

> Poles: 2
> In (A): 40 A
> Reclosing mode: Insulation
> Sensitivity: 30 mA
> Breaking element: built-in
> Type of protection: Type A

Description

The **REC4** family comprises 2- or 4-pole residual current circuit breakers paired with an intelligent automatic reclosing motor, which enables safe reclosing of the associated residual current circuit breaker.
The **REC4C** version can signal a lockout when the maximum number of reclosing attempts has been reached, by means of a status output.

Compact device, installed like a residual current circuit breaker. No interconnections between the motor and the residual current circuit breaker are required.

The time-based reclosing mode ensures continuity of electric supply. The device has a lockout system that determines whether it operates in manual or automatic mode (reclosing enabled).

Application

All electrical installations where full continuity of the electricity supply is required in the event of unforeseen situations that cause residual current protection devices to trip for reasons unrelated to electrical insulation.

- Residential sector, refrigerators, alarms, garage doors.
- Services sector, air conditioning, cold rooms, lighting, UPS, etc.
- Industrial sector, control of critical production processes.



REC4-2P-40-30

Self-reclosing RCCB

Code: P26A21.

Specifications

AC power supply

Installation category	CAT III 300 V
Consumption	5 VA
Frequency	50/60 Hz (± 5 %)
Nominal voltage	230 V ~ (± 20 %)

Mechanical characteristics

Size (mm) width x height x depth	54.5 x 115.5 x 81 (mm)
Envelope	Plastic V0 polycarbonate
Fastening	DIN rail
Weight (kg)	0,294

Environmental characteristics

Protection class	IP 20
Relative humidity (without condensation)	5 ... 95 %
Storage temperature	-35 ... +65 °C
Working temperature	Earth leakage protection: -25 ... +55 °C Reclosing: -10 ... +55 °C

Measurement circuit

Defect resistance (Rd) / Differential response	< 8 kΩ / Do not self-reclosing
Accepted minimum resistance (Rd0) / Differential response	> 16 kΩ / Self-reclosing

Standards

Electrical safety, Maximum height (m)	2000
Electrical safety, Installation category	CAT III 300 V ~
Electrical safety, Contamination level/class	Pollution resistance 2
Standards	UNE-EN 61008-1, UNE-EN 63024

User interface

LED	2 LED: AUTO, color green / REC, color red

Circuit breaker / RCCB

Rated conditional short-circuit current (Inc)	10 kA to 230/400V with gB 80A fuse
Nominal current (In)	40 A
Assigned frequency (Hz)	50/60
Rated breaking and re-closure capacity (Im)	500 A
Shock wave resistance	Class A, AC: 250A 8/20µs Class S: 3000A 8/20µs
Rated nominal voltage (Un)	230 V ~



REC4-2P-40-30

Self-reclosing RCCB

Code: P26A21.

Differential protection

Type	Type A
Sensitivity (IΔn), A	0,03
Delay time (tΔ)	INS

Protection

Circuit breaker type	Circuit breaker / RCCB

Reclosure type

Reclosure number	3
Reset time	10/20/60 s
Reclosure time	< 3/20/180 s

REC4
RCCB with self-reclosing system, type A

CODE	TYPE	Poles	In (A)	Reclosing mode	Breaking element
Domestic					
P26A21.	REC4-2P-40-30	2	40 A	Insulation	built-in
P26A31.	REC4-2P-63-30	2	63 A	Insulation	built-in
Industrial, tertiary					
P26A23.	REC4-2P-40-300	2	40 A	Time	built-in
P26A33.	REC4-2P-63-300	2	63 A	Time	built-in
P26F21.	REC4-4P-40-30	4	40 A	Time	built-in
P26F23.	REC4-4P-40-300	4	40 A	Time	built-in
P26F31.	REC4-4P-63-30	4	63 A	Time	built-in
P26F33.	REC4-4P-63-300	4	63 A	Time	built-in

3 reconnections: 3, 20, 180 s.

Creation date: 24/11/2026 - CIRCUTOR, SAU reserves the right to make technical changes or modify the content/images of this document without prior notice, in order to improve its reliability, functionality, design or for other reasons.
It accepts no liability for any errors, inaccuracies or possible lack of information in this document.



REC4-2P-40-30

Self-reclosing RCCB

Code: P26A21.

Dimensions

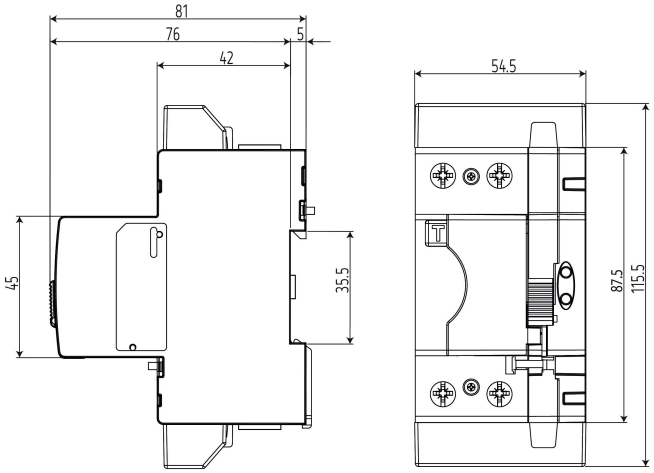

Connections

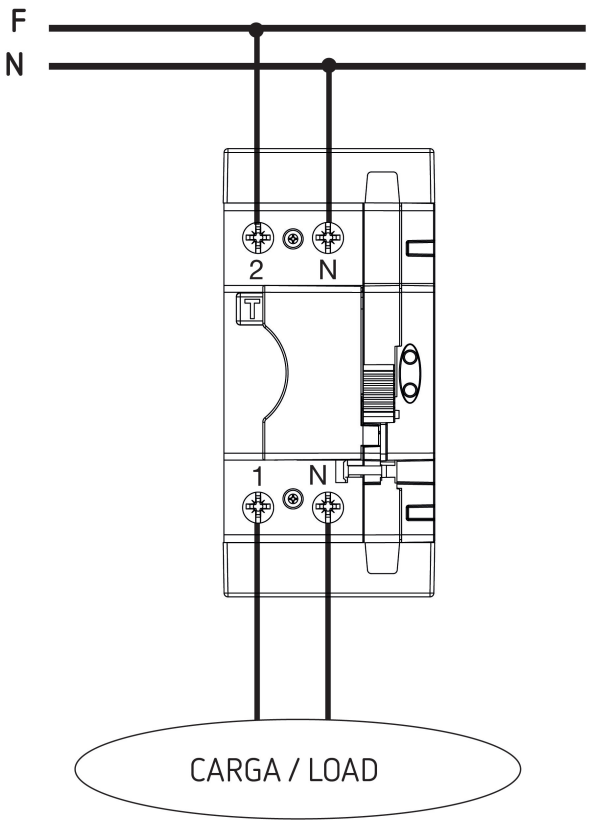

Creation date: 24/11/2026 - CIRCUTOR, SAU reserves the right to make technical changes or modify the content/images of this document without prior notice, in order to improve its reliability, functionality, design or for other reasons.
It accepts no liability for any errors, inaccuracies or possible lack of information in this document.