

IDB-4 4P-63A -30 mA

IDB-4 4P-63A -30 mA, Residual current relay

Code: P17231.

> Poles: 4
> In (A): 63 A
> Sensitivity: 30 mA
> Mounting: DIN rail

Description

Residual current protection device for the protection of people and property against fault currents, such as:

- Sinusoidal alternating currents and pulsating residual direct currents.
- Sinusoidal alternating currents, up to 1 kHz.
- Smooth direct currents

For installations up to 40 or 63 A and sensitivities of 30 or 300 mA.
INStantaneous tripping curve.

Application

All electrical installations where process continuity is critical and the protection of persons (30 mA) and machines (300 mA) is required, with non-adjustable immediate activation.
Such as, for example:

- Computer systems (UPS)
- Speed drives
- Photovoltaic installations
- Electric vehicle charging systems

Creation date: 23/11/2026 - CIRCUTOR, SAU reserves the right to make technical changes or modify the content/images of this document without prior notice, in order to improve its reliability, functionality, design or for other reasons.
It accepts no liability for any errors, inaccuracies or possible lack of information in this document.



IDB-4 4P-63A -30 mA

RCCB type B Instantaneous 30 mA and 300 mA

Code: P17231.

Specifications

AC power supply

Frequency	50/60 Hz
Nominal voltage	230 V ~ / 400 V ~

Electrical characteristics

Mechanical life	4000 operations
Electrical lifetime	2000 cycles

Mechanical characteristics

Size (mm) width x height x depth	72 x 80 x 68 (mm)
Fastening	DIN 46277 (EN 50022)
Weight (kg)	0,345

Environmental characteristics

Protection class	IP 20 (terminals), IP 41 (rear panel)
Relative humidity (without condensation)	95%
Working temperature	-25 ... +65 °C

Current measurement circuit

Nominal current (In)	63 A

Standards

Electrical safety, Maximum height (m)	2000
Electrical safety, Installation category	CAT III
Standards	IEC 61008, IEC 62423, IEC 61008-2-1

Electrical safety

Insulation	Double-insulated electric shock protection class II (IEC 61010-1)

Differential protection

Type	Type B
Sensitivity (IΔn), A	0,03
Delay time (tΔ)	Instantaneous or General (IEC 61008-1)

IDB-4
Type B RCCB



IDB-4 4P-63A -30 mA

RCCB type B Instantaneous 30 mA and 300 mA

Code: P17231.

CODE	TYPE	In (A)	Mounting	Poles	Sensitivity
P17221.	IDB-4 4P-40A-30 mA	40 A	DIN rail	4	30 mA
P17222.	IDB-4 4P-40A-300 mA	40 A	DIN rail	4	300 mA
P17231.	IDB-4 4P-63A -30 mA	63 A	DIN rail	4	30 mA
P17232.	IDB-4 4P-63A -300mA	63 A	DIN rail	4	300 mA

For three-phase and single-phase networks

Creation date: 23/11/2026 - CIRCUTOR, SAU reserves the right to make technical changes or modify the content/images of this document without prior notice, in order to improve its reliability, functionality, design or for other reasons.
It accepts no liability for any errors, inaccuracies or possible lack of information in this document.



IDB-4 4P-63A -30 mA

RCCB type B Instantaneous 30 mA and 300 mA

Code: P17231.

Dimensions

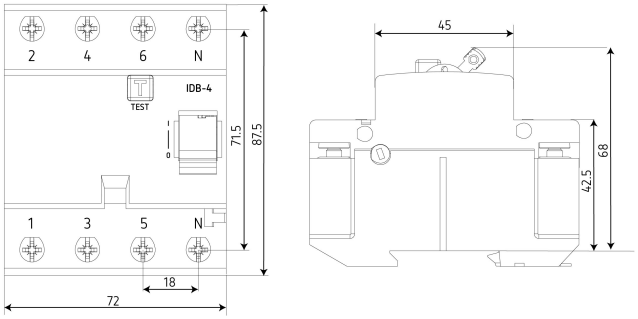

Connections

IMPORTANTE: Compruebe qué identificación de bornes tiene su dispositivo a instalar.
Asegúrese de conectar los cables correctamente conforme a la identificación de los bornes.

IMPORTANT: Check the terminal identification of your device to be installed.
Be sure to connect the wires correctly according to the terminal identification.

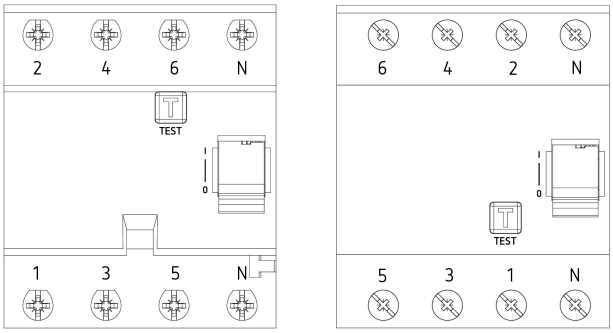

Consulte la guía correspondiente a su equipo aquí:
Please refer to the manual for your equipment here:

Creation date: 23/11/2026 - CIRCUTOR, SAU reserves the right to make technical changes or modify the content/images of this document without prior notice, in order to improve its reliability, functionality, design or for other reasons.
It accepts no liability for any errors, inaccuracies or possible lack of information in this document.