

CBS-40A

CBS-40A, Station with 4 programmable residual current relays, type A

Code: P12A70.

> Módules: 3
> Pre-alarm relay: Yes
> N° relays: 4
> IΔn (A): 0,03 ... 30 A
> Power supply: 110 ... 230 V~
> Delay: 0,1 ... 5 s, INS, SEL
> Mounting: DIN rail

Description

- Unit equivalent to 4 residual current protection networks. Features 4 independent programmable relays.
- Four inputs for connecting the external toroidal transformers of the **WGC / WGS** series.
- Super-immunised type-A relay with high-frequency current filtering and high immunity. True root mean square (TRMS) measure
- Compact size: 3 modules
- Features 5 independent programmable outputs (4 residual current tripping relays and 1 prealarm relay).



CBS-40A

Code: P12A70.

Specifications

AC power supply

Installation category	CAT III 300V
Consumption	7,5 VA
Frequency	50 ... 60 Hz
Nominal voltage	110 ... 230 V~

Mechanical characteristics

Size (mm) width x height x depth	52.5 x 118 x 74 (mm)
Envelope	Self-extinguishing V0 plastic
Weight (kg)	0,26

Environmental characteristics

Protection class	IP 30, IP 40 (Front)
Relative humidity (without condensation)	5 ... 95 %
Storage temperature	-20 ... +70 °C
Working temperature	-10 ... +60 °C

Electrical characteristics

Sensor	Type A: WGC

Digital inputs

Input impedance	94 kΩ
Input/output insulation	3 kV
Type	Potential-free contact

Standards

Electrical safety, Maximum height (m)	2000
Electrical safety, Installation category	CAT III 300V ~
Electrical safety, Contamination level/class	2
Standards	IEC 60947-2-M, IEC 62020-1, UNE-EN 60068-2-1, UNE-EN 60068-2-2, UNE-EN 60068-2-78

User interface

LED	2
Keyboard	3 buttons
Display type	LCD (negative)

Digital relay outputs

Quantity	4
Maximum current	6 A
Maximum open contact voltage	230 V ~ ± 15 %

Creation date: 24/11/2026 - CIRCUTOR, SAU reserves the right to make technical changes or modify the content/images of this document without prior notice, in order to improve its reliability, functionality, design or for other reasons.
It accepts no liability for any errors, inaccuracies or possible lack of information in this document.



CBS-40A

Code: P12A70.

Electrical life	60×10^3
Mechanical life	10×10^6
Maximum switching capacity	1500 VA

Digital transistor outputs

Type	Optoisolated
Maximum current	0.1 A
Maximum voltage	9 ... 48 V ~ / Vcc

Differential protection

Type	Type A ultra-immunised
Sensitivity (IΔn), A	0.03-0.1-0.3-0.5-1-3-5-10-30 A
Delay time (tΔ)	INS-(S)-0.1-0.2-0.3-0.4-0.5-0.8-1-2-3-5 s

CBS-40A/400A

Ultraimmunized 4 channels residual current relays, type A, 3 modules with display and a configurable prealarm output.

CODE	TYPE	N° relays	IΔn (A)	Módules	Pre-alarm relay	Power supply	Communications	Protocol
P12A70.	CBS-40A	4	0,03 ... 30 A	3	Yes	110 ... 230 V~		
P12A71.	CBS-400A	4	0,03 ... 30 A	3	Yes	110 ... 230 V~	RS-485	Modbus RTU

For supply voltages other than 230 Vac, please consult us.

Creation date: 24/11/2026 - CIRCUTOR, SAU reserves the right to make technical changes or modify the content/images of this document without prior notice, in order to improve its reliability, functionality, design or for other reasons.
It accepts no liability for any errors, inaccuracies or possible lack of information in this document.



CBS-40A

Code: P12A70.

Dimensions

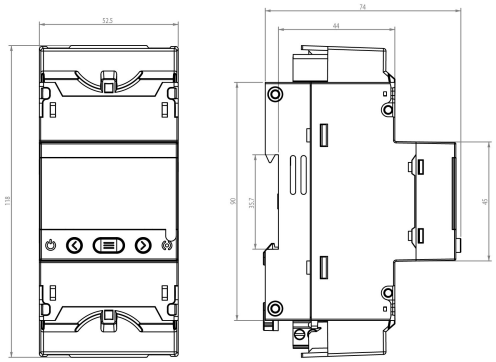

Connections

