

RG1M - 0,03

RG1M - 0,03, sidual current relay

Code: P12204.

> Módules: 1
> N° relays: 1
> IΔn (A): 0,03 A
> Power supply (Vac): 230 Vac
> Delay: 0,02 S
> Mounting: DIN rail

Description

Electronic residual current protection relay of the WGC series connected to the external toroidal transformers of the WGC series. These are highly reliable electronic relays with the option of having fixed or adjustable sensitivity and delay:

- True root mean square measure, TRMS.
- Assembly on **DIN 46277** rail (**EN 50022**)
- Reduced single-module size.

LED status indication:

- Power LED ON. Device powered on.
- Leakage LED ON. Tripped relay.
- Power LED flashing and leakage LED ON. Detection of a continuity fault in the transformer.

Application

RG1M relays used with WGC transformers offer a full residual current protection in single-phase and three-phase lines.



RG1M - 0,03

Electronic residual current relay with external transformer of the WGC series

Code: P12204.

Specifications

AC power supply

Installation category	CAT III 300 Vac (IEC 61010)
Consumption	4 VA
Frequency	50/60 Hz
Nominal voltage	230 V ~ (± 20 %)

Mechanical characteristics

Size (mm) width x height x depth	17.5 x 90 x 72 (mm)
Fastening	DIN rail
Weight (kg)	0,08

Environmental characteristics

Protection class	IP 20
Relative humidity (without condensation)	5 ... 95 %
Working temperature	-10 ... +65 °C

Standards

Electrical safety, Maximum height (m)	2000
Electrical safety, Installation category	CAT III 300V ca
Standards	IEC 60947-2-M

Electrical safety

Insulation	Double-insulated electric shock protection class II (IEC 61010-1)

Digital relay outputs

Nominal current	5 A
Nominal voltage	250 V ~
Maximum power	1250 VA
Electrical life (at maximum load)	$100x10^3$ (at 85 °C)
Maximum switching capacity	1250 VA

Differential protection

Sensitivity (IΔn), A	0,03
Delay time (tΔ)	0,02 s
Transformer	External, WGC series

Protection

LED indication	Earth leakage tripping



RG1M - 0,03

Electronic residual current relay with external transformer of the WGC series

Code: P12204.

Measure	True root mean square (TRMS)

RG1M
Ultraimmunized residual current relays 1 module

CODE	TYPE	N° relays	IΔn (A)
P12204.	RG1M - 0,03	1	0,03 A
P12214.	RG1M - 0,3	1	0,3 A

Requires a WGC residual current transformer

Creation date: 24/11/2026 - CIRCUTOR, SAU reserves the right to make technical changes or modify the content/images of this document without prior notice, in order to improve its reliability, functionality, design or for other reasons.
It accepts no liability for any errors, inaccuracies or possible lack of information in this document.



RG1M - 0,03

Electronic residual current relay with external transformer of the WGC series

Code: P12204.

Dimensions

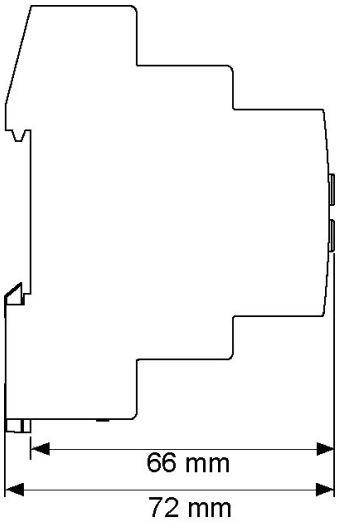

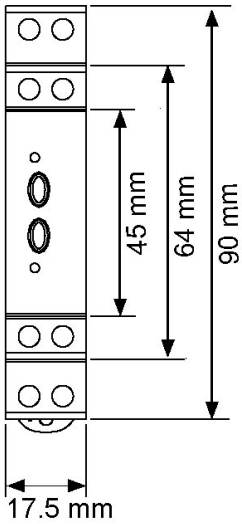

Connections

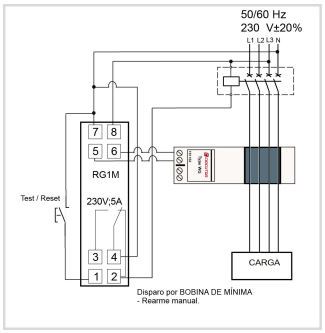

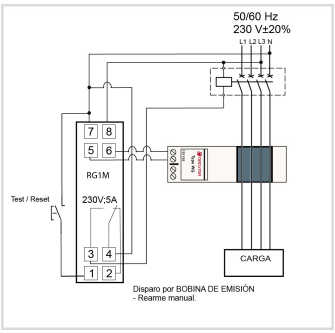

Creation date: 24/11/2026 - CIRCUTOR, SAU reserves the right to make technical changes or modify the content/images of this document without prior notice, in order to improve its reliability, functionality, design or for other reasons.
It accepts no liability for any errors, inaccuracies or possible lack of information in this document.