

WGC-25-TB

WGC-25-TB, Residual current transformer

Code: P11751.

> Usefull diam.(mm): 25
> IΔn min.(A): 0.1
> Max. Current (A): 63

Specifications

AC power supply, insulation

Pulse test (kV)	3 kV

Mechanical characteristics

Size (mm) width x height x depth	60.5 x 64 x 50 (mm)
Envelope	Self-extinguishing polycarbonate UL 94 V0
Fastening	DIN rail with accessory
Connection type	Screw terminal (Pz type)
Weight (kg)	0,118

Environmental characteristics

Protection class	IP 20 (Terminals) IEC 60529

Current measurement circuit

Dynamic current (Idyn)	2,5 Ith
Permanent thermal current (Icth)	6 A
Thermal short-circuit current (Ith)	1,8 kA / 1s
Maximum operating voltage (Um)	720 V

Standards

Standards	IEC 60664-1, IEC 60664-3, IEC 61869-2

Measurement accuracy

Accuracy	10 ... 15 %

Differential protection

Type	Type B

WGC-TB
Residual current transformers for type-B relays

CODE	TYPE	Inner diameter (mm)	In (A)
Only for RGU-10B			
P11731.	WGS-20-TB	20	63
P11751.	WGC-25-TB	25	63

Creation date: 24/11/2026 - CIRCUTOR, SAU reserves the right to make technical changes or modify the content/images of this document without prior notice, in order to improve its reliability, functionality, design or for other reasons.
It accepts no liability for any errors, inaccuracies or possible lack of information in this document.



WGC-25-TB

Residual current transformers for type-B residual current relays

Code: P11751.

CODE	TYPE	Inner diameter (mm)	In (A)
P11752.	WGC-35-TB	35	80
P11753.	WGC-55-TB	55	160
P11755.	WGC-80-TB	80	250
P11756.	WGC-110 TB	110	400
P11757.	WGC-140 TB	140	600
P11758.	WGC-180 TB	180	800

Creation date: 24/11/2026 - CIRCUTOR, SAU reserves the right to make technical changes or modify the content/images of this document without prior notice, in order to improve its reliability, functionality, design or for other reasons.
It accepts no liability for any errors, inaccuracies or possible lack of information in this document.



WGC-25-TB

Residual current transformers for type-B residual current relays

Code: P11751.

Dimensions

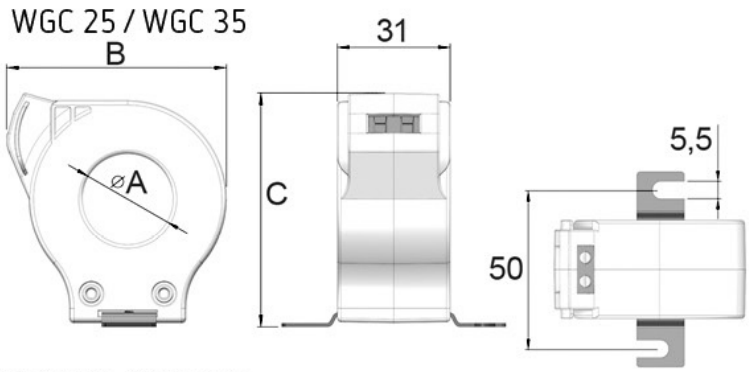

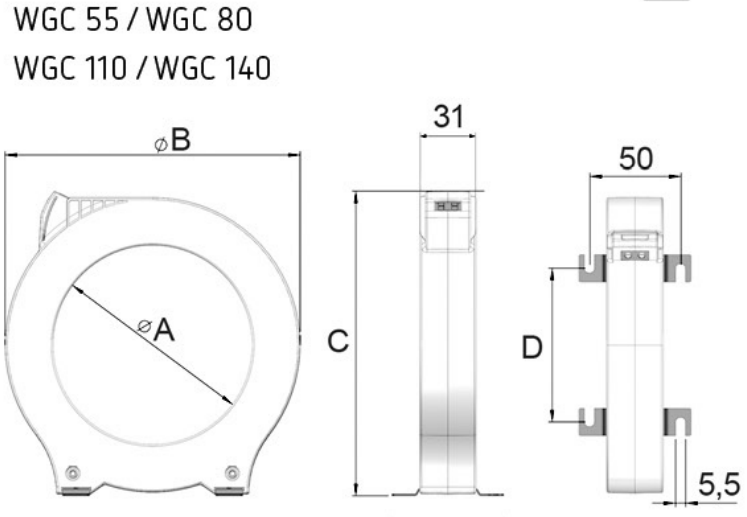

Modelo	A	B	C	D
WGC 25	25	60,5	64	
WGC 35	35	70,5	75,5	
WGC 55	55	92	98	38
WGC 80	80	124,5	130	60
WGC 110	110	163	168	84,5
WGC 140	140	201	206	110
WGC 180	180	252	256	144

Creation date: 24/11/2026 - CIRCUTOR, SAU reserves the right to make technical changes or modify the content/images of this document without prior notice, in order to improve its reliability, functionality, design or for other reasons.
It accepts no liability for any errors, inaccuracies or possible lack of information in this document.