

WGC-35

WGC-35, Residual current transformer

Code: P10152.

> Usefull diam.(mm): 35
> Cable (m): 0
> Max. Current (A): 80

Description

This new range features a series of improvements intended in particular for installing units on switchboards. Along with the usual attachment elements, this unit can be installed on DIN rails using an accessory, which facilitates its installation.

The residual current transformers of the **WGC** series offer better immunity to the transient current spikes that usually trigger the residual current protection. The residual current transformers of the **WGC** series have been designed to operate with the relays of the **WGC** series. The sensitivity (trip current) of the transformer-relay assembly is established by the associated relay.

Creation date: 25/11/2026 - CIRCUTOR, SAU reserves the right to make technical changes or modify the content/images of this document without prior notice, in order to improve its reliability, functionality, design or for other reasons.
It accepts no liability for any errors, inaccuracies or possible lack of information in this document.



WGC-35

Residual current transformers

Code: P10152.

Specifications

AC power supply, insulation

Pulse test (kV)	3 kV

Mechanical characteristics

Size (mm) width x height x depth	70.5 x 75.5 x 50 (mm)
Envelope	Self-extinguishing polycarbonate UL 94 V0
Fastening	DIN rail with accessory (see code)
Connection type	Screw terminal (Pz type)
Weight (kg)	0,111

Environmental characteristics

Protection class	IP 20 (Terminals) IEC 60529
Relative humidity (without condensation)	5 ... 95 %
Working temperature	-20 ... + 70 °C

Current measurement circuit

Dynamic current (Idyn)	2,5 Ith
Permanent thermal current (Icth)	60 A
Thermal short-circuit current (Ith)	1,8 kA / 1s
Transformation ratio	30 / 0,06 A
Maximum operating voltage (Um)	720 V

Standards

Electrical safety, Maximum height (m)	2000
Electrical safety, Installation category	CAT III
Standards	IEC 60664-1, IEC 60664-3, IEC 60044-1

Measurement accuracy

Accuracy	10 ... 15 %

WGC
Residual current transformer

CODE	TYPE	Inner diameter (mm)	Cable (m)	In (A)
P10181.	WGC-20-SC	20	0.5	63
P10182.	WGC-30-SC	30	0.5	63
P10131.	WGS-20	20	-	63
P10132.	WGS-30	30	-	63

Creation date: 25/11/2026 - CIRCUTOR, SAU reserves the right to make technical changes or modify the content/images of this document without prior notice, in order to improve its reliability, functionality, design or for other reasons.
It accepts no liability for any errors, inaccuracies or possible lack of information in this document.



WGC-35

Residual current transformers

Code: P10152.

CODE	TYPE	Inner diameter (mm)	Cable (m)	In (A)
P10151.	WGC-25	25	-	63
P10152.	WGC-35	35	-	80
P10153.	WGC-55	55	-	160
P10154.	WGC-80	80	-	250
P10155.	WGC-110	110	-	400
P10156.	WGC-140	140	-	600
P10157.	WGC-180	180	-	800
P10158.	WGC-220x105	220 x 105	-	1250
P10159.	WGC-350x150	350 x 150	-	2000
P10160.	WGC-500x200	500 x 200	-	4000

UL certification for all WGC and WGS models

Creation date: 25/11/2026 - CIRCUTOR, SAU reserves the right to make technical changes or modify the content/images of this document without prior notice, in order to improve its reliability, functionality, design or for other reasons.
It accepts no liability for any errors, inaccuracies or possible lack of information in this document.



WGC-35

Residual current transformers

Code: P10152.

Dimensions

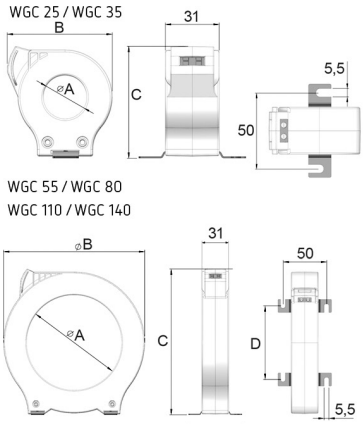

Modelo	A	B	C	D
WGC 25	25	60,5	64	
WGC 35	35	70,5	75,5	
WGC 55	55	92	98	38
WGC 80	80	124,5	130	60
WGC 110	110	163	168	84,5
WGC 140	140	201	206	110
WGC 180	180	252	256	144

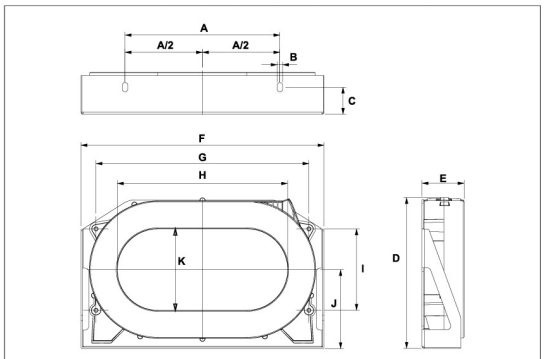

	A	B	C	D	E	F	G	H	I	J	K
WGC 220x105	200	7	35	195	54,2	314	275	220	105	102	105
WGC 350x150	340	7	30	279	50,2	479	430	350	165	143	150
WGC 500x200	460	7	40	306	64	614	550	500	180	155	200

Creation date: 25/11/2026 - CIRCUTOR, SAU reserves the right to make technical changes or modify the content/images of this document without prior notice, in order to improve its reliability, functionality, design or for other reasons.
It accepts no liability for any errors, inaccuracies or possible lack of information in this document.