

MAG-ADAPx5

MAG-ADAPx5, Kit 5 voltage adapters, magnetic tip Ø 6.6 mm,

Code: M8990L. **DESCATALOGADO**

Description

Magnetic tip for voltage measurement on the screws of billing meters, circuit breakers, busbars or any metal surface.

Creation date: 23/11/2026 - CIRCUTOR, SAU reserves the right to make technical changes or modify the content/images of this document without prior notice, in order to improve its reliability, functionality, design or for other reasons.
It accepts no liability for any errors, inaccuracies or possible lack of information in this document.



MAG-ADAPx5

Voltage adapter, magnetic tip Ø 6.6mm

Code: M8990L.

Specifications

Mechanical characteristics

Size (mm) width x height x depth	15.7 x 53.1 x 55 (mm)
Weight (kg)	0,078

Environmental characteristics

Relative humidity (without condensation)	80%
Working temperature	5 ... + 40 °C

Standards

Certifications	CE
Electrical safety, Maximum height (m)	2000
Electrical safety, Installation category	1000 V CAT II / 1000 V CAT III / 600 V CAT IV
Electrical safety, Contamination level/class	Pollution degree 1 or 2
Standards	EN 61010-031

Electrical safety

Insulation	Reinforced insulation

MAG-ADAP
Voltage adaptor, magnetic tip

CODE	TYPE	Description
M8990H.	MAG-ADAP	Voltage adapter, magnetic tip Ø 6.6 mm

Creation date: 23/11/2026 - CIRCUTOR, SAU reserves the right to make technical changes or modify the content/images of this document without prior notice, in order to improve its reliability, functionality, design or for other reasons.
It accepts no liability for any errors, inaccuracies or possible lack of information in this document.



MAG-ADAPx5

Voltage adapter, magnetic tip Ø 6.6mm

Code: M8990L.

Dimensions

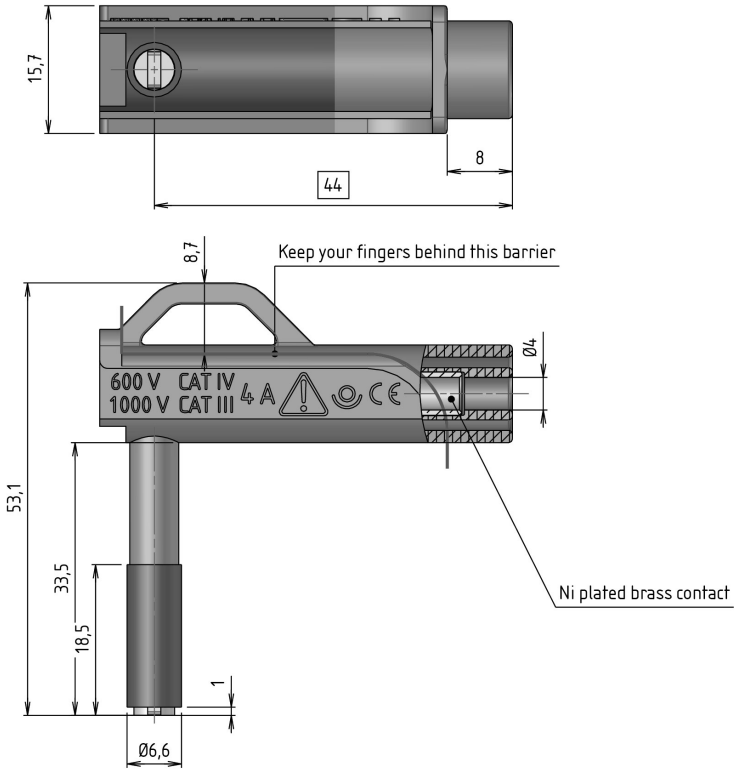

Creation date: 23/11/2026 - CIRCUTOR, SAU reserves the right to make technical changes or modify the content/images of this document without prior notice, in order to improve its reliability, functionality, design or for other reasons.
It accepts no liability for any errors, inaccuracies or possible lack of information in this document.