

MYeBOX-PSN480

MYeBOX-PSN480, MYeBOX power supply (480 V),

Code: M8441A.

Specifications

AC power supply

Consumption	8 ... 47 VA
Frequency	47 ... 63 Hz
Nominal voltage	230 ... 480 V~

Mechanical characteristics

Size (mm) width x height x depth	78.8 x 78.8 x 53.1 (mm)
Envelope	ABS (UL 94 - V0)
Weight (kg)	0,4

Environmental characteristics

Protection class	IP 30
Relative humidity (without condensation)	5 ... 95 %
Storage temperature	-20 ... + 70 °C
Working temperature	0 ... + 40 °C

Standards

Certifications	CE
Electrical safety, Maximum height (m)	2000
Electrical safety, Installation category	CAT IV 300 V
Standards	IEC 61010-1, IEC 61000-6-2, IEC 61000-6-4

Power supply

Maximum output voltage / current	370 V peak / 1,5 A peak

Accesor-MYeBOX

Accessories for MYeBOX

CODE	TYPE	Description
M8401C.	V-Wire x4	set of 4 600 V CAT III cables
M8401D.	V-Wire x5	set of 5 600 V CAT III cables
M84011.	MYeBOX-BAT	MyEBOX battery
M8441F.	MYeBOX-PSN	MYeBOX power cable
M8401A.	MYeBOX-PS480	MYEBOX power supply (480 V)
M8441A.	MYeBOX-PSN480	MYeBOX power supply (480 V)
M84014.	MYeBOX-MARKER	Markers
M84015.	MYeBOX-CARRYING BAG	Carrying bag
M84016.	MYeBOX-BELT	MyEBOX strap

Creation date: 25/11/2026 - CIRCUTOR, SAU reserves the right to make technical changes or modify the content/images of this document without prior notice, in order to improve its reliability, functionality, design or for other reasons.
It accepts no liability for any errors, inaccuracies or possible lack of information in this document.



MYeBOX-PSN480

Code: M8441A.

CODE	TYPE	Description
M84017.	MYeBOX-MAG SUPPORT	MyEBOX magnetic base

Creation date: 25/11/2026 - CIRCUTOR, SAU reserves the right to make technical changes or modify the content/images of this document without prior notice, in order to improve its reliability, functionality, design or for other reasons.
It accepts no liability for any errors, inaccuracies or possible lack of information in this document.



MYeBOX-PSN480

Code: M8441A.

Dimensions

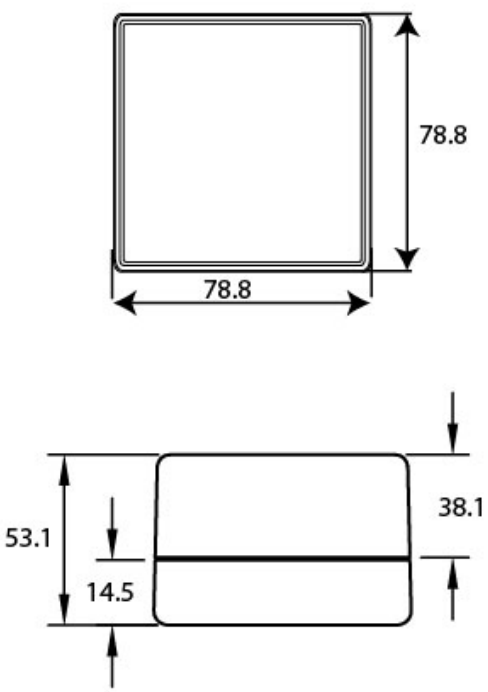

Connections

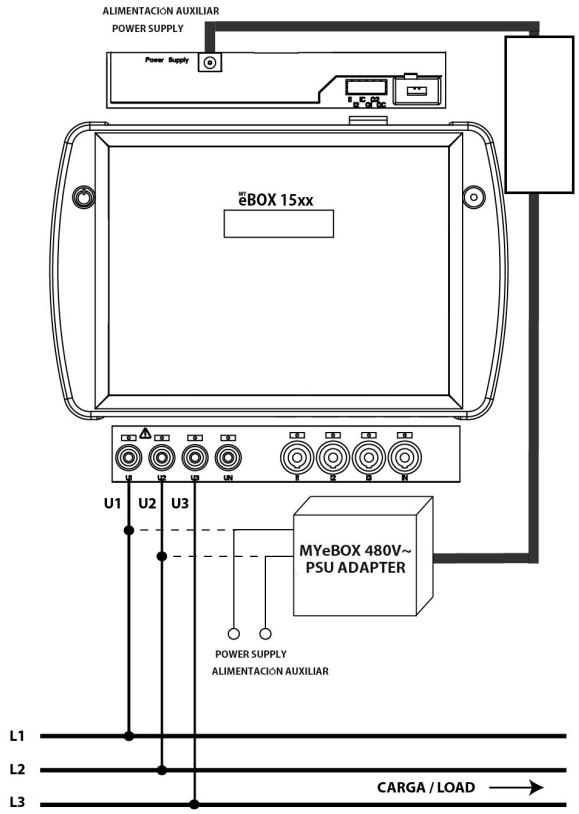

Creation date: 25/11/2026 - CIRCUTOR, SAU reserves the right to make technical changes or modify the content/images of this document without prior notice, in order to improve its reliability, functionality, design or for other reasons.
It accepts no liability for any errors, inaccuracies or possible lack of information in this document.