

TP8 400/5

TP8 400/5, Current transformers split core, flat strip 60x80 mm

Code: M78026.

> Flat strip(mm): 60X80
> Inner diameter (mm): 60
> System: Single-phase
> Class 0,5 Power (VA): 1
> Class 1 Power (VA): 1,5
> Class 3 Power (VA): 3
> Measurement Range (A): 400/5
> Input current: 400
> Transformer type: Split core

Description

The **TP** transformer range has been designed to facilitate installation thanks to its split core, which allows it to be installed without having to shut off the power, in both cable and busbar installations.
Main features:

- Primary currents from 75 to 5000 A.
- Secondary currents.../5 A and.../1 A.
- Busbar dimension from 30 x 30 mm to 160 x 80 mm.
- Safety lock for the TP-10 and TP-12 models.
- Sealable terminals and cable fastening accessories included.

Application

Ideal for installations where it is not possible to shut off the electricity or dismantle the installation in order to install the transformers.

Creation date: 23/11/2026 - CIRCUTOR, SAU reserves the right to make technical changes or modify the content/images of this document without prior notice, in order to improve its reliability, functionality, design or for other reasons.
It accepts no liability for any errors, inaccuracies or possible lack of information in this document.



TP8 400/5

Split-core measurement current transformer

Code: M78026.

Specifications

Electrical characteristics

Safety factor (SF)	10
Power	1 VA(Class 0.5) , 1,5 VA(Class 1) , 3 VA(Class 3)
Insulation voltage between terminals S1-S2	3 kV

Mechanical characteristics

Size (mm) width x height x depth	138 x 51 x 154.8 (mm)
Envelope	Plastic V0 self-extinguishing
Fastening	Mural or DIN rail by accessory
Weight (kg)	0,55

Environmental characteristics

Thermal Class	class B (+130 °C)
Protection class	IP 20
Relative humidity (without condensation)	15 ... 85%
Storage temperature	-40 ... +85 °C
Working temperature	-5 ... +40 °C

Specific technical characteristics of current sensors

Operating voltage	0,72 kV~ máx.

Current measurement circuit

Nominal frequency	50 / 60 Hz
Primary current measurement	400 A
Dynamic current (Idyn)	2,5 Ith
Thermal short-circuit current (Ith)	60 In
Transformation ratio	... / 5 A

Standards

Electrical safety, Maximum height (m)	1000
Standards	UNE-EN 61869-1, UNE-EN 61869-2, UL 94

TP
Current transformers, split core

CODE	TYPE	Measurement Range (A)	Flat strip(mm)	Class 0,5 Power (VA)	Class 1 Power (VA)	Class 3 Power (VA)
TP						

Creation date: 23/11/2026 - CIRCUTOR, SAU reserves the right to make technical changes or modify the content/images of this document without prior notice, in order to improve its reliability, functionality, design or for other reasons.
It accepts no liability for any errors, inaccuracies or possible lack of information in this document.



TP8 400/5

Split-core measurement current transformer

Code: M78026.

CODE	TYPE	Measurement Range (A)	Flat strip(mm)	Class 0,5 Power (VA)	Class 1 Power (VA)	Class 3 Power (VA)
M78011.	TP6 75/5	75/5	30x30	-	-	1
M78012.	TP6 100/5	100/5	30x30	-	-	1
M78013.	TP6 150/5	150/5	30x30	-	-	1
M78014.	TP6 200/5	200/5	30x30	-	-	2
M78015.	TP6 250/5	250/5	30x30	-	1	2
M78016.	TP6 300/5	300/5	30x30	0.5	1	2
M78017.	TP6 400/5	400/5	30x30	1	2.5	4
M78021.	TP8 100/5	100/5	60X80	-	-	1
M78022.	TP8 150/5	150/5	60X80	-	-	1.5
M78023.	TP8 200/5	200/5	60X80	-	-	1.5
M78024.	TP8 250/5	250/5	60X80	-	1	2
M78025.	TP8 300/5	300/5	60X80	-	1	2.5
M78026.	TP8 400/5	400/5	60X80	1	1.5	3
M78027.	TP8 500/5	500/5	60X80	2	5	7.5
M78028.	TP8 600/5	600/5	60X80	2	5	8
M78029.	TP8 700/5	700/5	60X80	2	5	8
M7802A.	TP8 750/5	750/5	60X80	2.5	5	10
M7802B.	TP8 800/5	800/5	60X80	3	6	10
M7802C.	TP8 1000/5	1000/5	60X80	5	8	15
M78031.	TP10 500/5	500/5	80x120	-	4	12
M78032.	TP10 600/5	600/5	80x120	-	5	14
M78033.	TP10 750/5	750/5	80x120	3	6	17
M78034.	TP10 800/5	800/5	80x120	3	7	18
M78035.	TP10 1000/5	1000/5	80x120	5	9	20
M78036.	TP10 1200/5	1200/5	80x120	6	11	24
M78037.	TP10 1250/5	1250/5	80x120	7	15	28
M78038.	TP10 1500/5	1500/5	80x120	8	17	30
M78039.	TP10 1600/5	1600/5	80x120	8	17	30
M7803A.	TP10 2000/5	2000/5	80x120	8	17	30
M7803B.	TP10 2500/5	2500/5	80x120	8	17	30
M78041.	TP12 1000/5	1000/5	80x160	10	15	20
M78042.	TP12 1500/5	1500/5	80x160	15	20	25
M78043.	TP12 1600/5	1600/5	80x160	15	20	25
M78044.	TP12 2000/5	2000/5	80x160	15	20	25
M78045.	TP12 2500/5	2500/5	80x160	15	20	25
M78046.	TP12 3000/5	3000/5	80x160	20	25	30
M78047.	TP12 4000/5	4000/5	80x160	20	25	30
M78048.	TP12 5000/5	5000/5	80x160	20	25	30

Creation date: 23/11/2026 - CIRCUTOR, SAU reserves the right to make technical changes or modify the content/images of this document without prior notice, in order to improve its reliability, functionality, design or for other reasons.
It accepts no liability for any errors, inaccuracies or possible lack of information in this document.



TP8 400/5

Split-core measurement current transformer

Code: M78026.

For greater currents, use: transformer + transducer

Creation date: 23/11/2026 - CIRCUTOR, SAU reserves the right to make technical changes or modify the content/images of this document without prior notice, in order to improve its reliability, functionality, design or for other reasons.
It accepts no liability for any errors, inaccuracies or possible lack of information in this document.



TP8 400/5

Split-core measurement current transformer

Code: M78026.

Dimensions

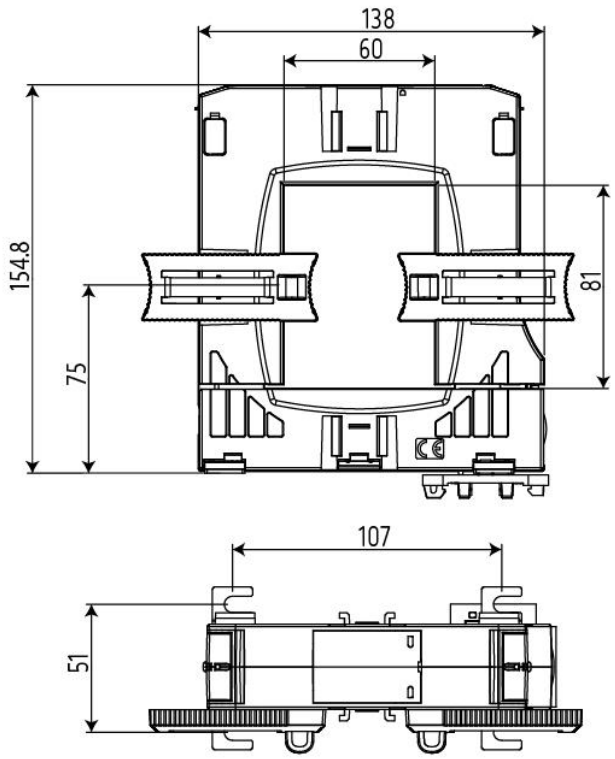

Connections

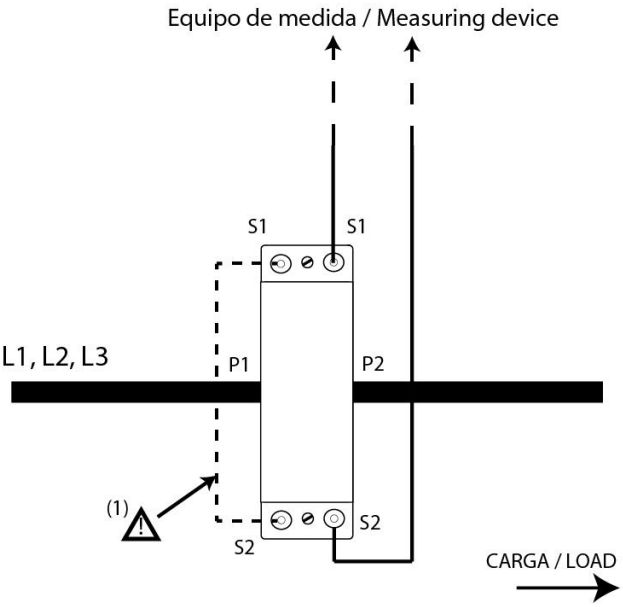

Creation date: 23/11/2026 - CIRCUTOR, SAU reserves the right to make technical changes or modify the content/images of this document without prior notice, in order to improve its reliability, functionality, design or for other reasons.
It accepts no liability for any errors, inaccuracies or possible lack of information in this document.