

TDH5.2 100/5A

TDH5.2 100/5A, High precision current transformers

Code: M770A5.

> Flat strip(mm): 25 x 10 | 30 x 10 | 20 x 12
> Inner diameter (mm): 22
> System: Single-phase
> Class 0,2 Power (VA): 0,5
> Class 0,5S Power (VA): 0,5
> Measurement Range (A): 100/5
> Input current: 100 A
> Transformer type: Closed core

Description

The **TDH** series transformers are high precision current transformers with an improved design that meet all the needs of today's installations. They are versatile devices when it comes to mounting and fixing, and they are sealable, with the aim of avoiding any manipulation.

Main features:

- Type: bar entrance
- From 60 to 4000 A
- Test Report
- DIN rail fixing accessory
- Sealable
- Secondary .../5 A, .../1 A and .../250 mA (consult availability)
- Diameters from 20 to 63 mm

Application

These transformers have been conceived to convert nominal currents in any installation to current values adjusted to measurement devices.



TDH5.2 100/5A

High precision current transformers

Code: M770A5.

Specifications

Electrical characteristics

Safety factor (SF)	5
Power	0,5 VA (Class0.2) , 0,5 VA (Class0.5S)
Insulation voltage between terminals S1-S2	3 kV

Mechanical characteristics

Size (mm) width x height x depth	58 x 84 x 53 (mm)
Envelope	Plastic wrap V0 self-extinguishing, UL 94
Fastening	DIN rail with accessory
Weight (kg)	0,5

Environmental characteristics

Thermal Class	Class B (+130 °C)
Protection class	IP 20
Relative humidity (without condensation)	15 ... 95 %
Storage temperature	-40 ... +85 °C
Working temperature	-5 ... +40 °C

Specific technical characteristics of current sensors

Inner diameter Ø (mm)	22
Operating voltage	0,72 kV~ máx.

Current measurement circuit

Nominal frequency	50 / 60 Hz
Primary current measurement	100 A
Dynamic current (Idyn)	2,5 Ith
Thermal short-circuit current (Ith)	60 In
Transformation ratio	... / 5 A

Standards

Electrical safety, Maximum height (m)	2000
Standards	IEC 61869-1, IEC 61869-2

TDH

High precision current transformer

CODE	TYPE	Input current	Inner diameter (mm)	Class 0,2 Power (VA)	Class 0,5S Power (VA)	Class 0,2S Power (VA)	Flat strip(mm)



TDH5.2 100/5A

High precision current transformers

Code: M770A5.

CODE	TYPE	Input current	Inner diameter (mm)	Class 0,2 Power (VA)	Class 0,5S Power (VA)	Class 0,2S Power (VA)	Flat strip(mm)
TDH4							
M77013.	TDH4 60/5A	60 A	20	0,5	0,5		
M77014.	TDH4 75/5A	75 A	20	0,75	0,75	0,5	
M77015.	TDH4 100/5A	100 A	20	1	1	0,5	
M77016.	TDH4 125/5A	125 A	20	1,5	1,5	1	
M77017.	TDH4 150/5A	150 A	20	2,5	2,5	2	
M77018.	TDH4 200/5A	200 A	20	3,5	3,5	3	
TDH5							
M77023.	TDH5 60/5A	60 A	20	0,5	0,5		15 x 15 | 20 x 10 | 25 x 5
M77024.	TDH5 75/5A	75 A	20	1	1	0,5	15 x 15 | 20 x 10 | 25 x 5
M77025.	TDH5 100/5A	100 A	20	1,5	1,5	0,75	15 x 15 | 20 x 10 | 25 x 5
M77026.	TDH5 125/5A	125 A	20	1,5	1,5	0,75	15 x 15 | 20 x 10 | 25 x 5
M77027.	TDH5 150/5A	150 A	20	1,5	1,5	1	15 x 15 | 20 x 10 | 25 x 5
M77028.	TDH5 200/5A	200 A	20	2,5	2,5	2	15 x 15 | 20 x 10 | 25 x 5
M77029.	TDH5 250/5A	250 A	20	2,5	2,5	2	15 x 15 | 20 x 10 | 25 x 5
TDH5.2							
M770A5.	TDH5.2 100/5A	100 A	22	0,5	0,5		25 x 10 | 30 x 10 | 20 x 12
M770A6.	TDH5.2 125/5A	125 A	22	0,75	0,75	0,5	25 x 10 | 30 x 10 | 20 x 12
M770A7.	TDH5.2 150/5A	150 A	22	1	1	0,5	25 x 10 | 30 x 10 | 20 x 12
M770A8.	TDH5.2 200/5A	200 A	22	1,5	1,5	1	25 x 10 | 30 x 10 | 20 x 12
M770A9.	TDH5.2 250/5A	250 A	22	2	2	1,5	25 x 10 | 30 x 10 | 20 x 12
M770AA.	TDH5.2 300/5A	300 A	22	1,5	1,5	1	25 x 10 | 30 x 10 | 20 x 12
M770AB.	TDH5.2 400/5A	400 A	22	2,5	2,5	2	25 x 10 | 30 x 10 | 20 x 12
M770AC.	TDH5.2 500/5A	500 A	22	5	5	2	25 x 10 | 30 x 10 | 20 x 12
M770AD.	TDH5.2 600/5A	600 A	22	5	5	2	25 x 10 | 30 x 10 | 20 x 12
TDH6.2							
M77055.	TDH6.2 100/5A	100 A	25	1	1	0,5	25 x 12 |30 x 10 |20 x 20
M77056.	TDH6.2 125/5A	125 A	25	2	2	1	25 x 12 | 30 x 10 | 20 x 20
M77057.	TDH6.2 150/5A	150 A	25	3	3	1,5	25 x 12 | 30 x 10 | 20 x 20
M77058.	TDH6.2 200/5A	200 A	25	3,5	3,5	2,5	25 x 12 | 30 x 10 | 20 x 20
M77059.	TDH6.2 250/5A	250 A	25	3,5	3,5	2,5	25 x 12 | 30 x 10 | 20 x 20
M7705A.	TDH6.2 300/5A	300 A	25	7,5	7,5	5	25 x 12 | 30 x 10 | 20 x 20
M7705B.	TDH6.2 400/5A	400 A	25	7,5	7,5	5	25 x 12 | 30 x 10 | 20 x 20
M7705C.	TDH6.2 500/5A	500 A	25	7,5	7,5	5	25 x 12 | 30 x 10 | 20 x 20
M7705D.	TDH6.2 600/5A	600 A	25	7,5	7,5	5	25 x 12 | 30 x 10 | 20 x 20
TDH6							
M77047.	TDH6 150/5A	150 A	28	1	1	0,5	20 x 25 |30 x 15 |40 x 10
M77048.	TDH6 200/5A	200 A	28	2	2	1	20 x 25 | 30 x 15 | 40 x 10

Creation date: 23/11/2026 - CIRCUTOR, SAU reserves the right to make technical changes or modify the content/images of this document without prior notice, in order to improve its reliability, functionality, design or for other reasons.
It accepts no liability for any errors, inaccuracies or possible lack of information in this document.



TDH5.2 100/5A

High precision current transformers

Code: M770A5.

CODE	TYPE	Input current	Inner diameter (mm)	Class 0,2 Power (VA)	Class 0,5S Power (VA)	Class 0,2S Power (VA)	Flat strip(mm)
M77049.	TDH6 250/5A	250 A	28	2,5	2,5	1,5	20 x 25 | 30 x 15 | 40 x 10
M7704A.	TDH6 300/5A	300 A	28	3,5	3,5	2,5	20 x 25 | 30 x 15 | 40 x 10
M7704B.	TDH6 400/5A	400 A	28	3,5	3,5	2,5	20 x 25 | 30 x 15 | 40 x 10
M7704C.	TDH6 500/5A	500 A	28	5	5	3,5	20 x 25 | 30 x 15 | 40 x 10
M7704D.	TDH6 600/5A	600 A	28	5	5	3,5	20 x 25 | 30 x 15 | 40 x 10
M7704E.	TDH6 750/5A	750 A	28	5	5	3,5	20 x 25 | 30 x 15 | 40 x 10
M7704F.	TDH6 800/5A	800 A	28	5	5	3,5	20 x 25 | 30 x 15 | 40 x 10
TDH8							
M7706A.	TDH8 300/5A	300 A	43	2	2	1	50 x 30 | 60 x 12| 13 x 45
M7706B.	TDH8 400/5A	400 A	43	2	2	1	50 x 30 | 60 x 12| 13 x 45
M7706C.	TDH8 500/5A	500 A	43	3,5	3,5	2	50 x 30 | 60 x 12| 13 x 45
M7706D.	TDH8 600/5A	600 A	43	3,5	3,5	2	50 x 30 | 60 x 12| 13 x 45
M7706E.	TDH8 750/5A	750 A	43	3,5	3,5	2	50 x 30 | 60 x 12| 13 x 45
M7706F.	TDH8 800/5A	800 A	43	3,5	3,5	2	50 x 30 | 60 x 12| 13 x 45
M7706G.	TDH8 1000/5A	1000 A	43	5	5	3,5	50 x 30 | 60 x 12| 13 x 45
M7706H.	TDH8 1200/5A	1200 A	43	5	5	3,5	50 x 30 | 60 x 12| 13 x 45
M7706J.	TDH8 1250/5A	1250 A	43	7,5	7,5	5	50 x 30 | 60 x 12| 13 x 45
M7706K.	TDH8 1500/5A	1500 A	43	7,5	7,5	5	50 x 30 | 60 x 12| 13 x 45
M7706L.	TDH8 1600/5A	1600 A	43	7,5	7,5	5	50 x 30 | 60 x 12| 13 x 45
TDH10							
M7707D.	TDH10 600/5A	600A	63	3,75	3,75	2,5	50 x 50 | 60 x 30 | 80 x 30
M7707E.	TDH10 750/5A	750A	63	3,75	3,75	2,5	50 x 50 | 60 x 30 | 80 x 30
M7707F.	TDH10 800/5A	800A	63	3,75	3,75	2,5	50 x 50 | 60 x 30 | 80 x 30
M7707G.	TDH10 1000/5A	1000A	63	3,75	3,75	2,5	50 x 50 | 60 x 30 | 80 x 30
M7707H.	TDH10 1200/5A	1200A	63	3,75	3,75	2,5	50 x 50 | 60 x 30 | 80 x 30
M7707J.	TDH10 1250/5A	1250A	63	3,75	3,75	2,5	50 x 50 | 60 x 30 | 80 x 30
M7707K.	TDH10 1500/5A	1500A	63	7,5	7,5	5	50 x 50 | 60 x 30 | 80 x 30
M7707L.	TDH10 1600/5A	1600A	63	7,5	7,5	5	50 x 50 | 60 x 30 | 80 x 30
M7707M.	TDH10 2000/5A	2000A	63	7,5	7,5	5	50 x 50 | 60 x 30 | 80 x 30
M7707N.	TDH10 2500/5A	2500A	63	7,5	7,5	5	50 x 50 | 60 x 30 | 80 x 30
M7707P.	TDH10 3000/5A	3000A	63	7,5	7,5	5	50 x 50 | 60 x 30 | 80 x 30
TDH12							
M7708F.	TDH12 800/5A	800A	50	2,5	2,5		100 x 50
M7708G.	TDH12 1000/5A	1000A	50	2,5	2,5	1,25	100 x 50
M7708H.	TDH12 1200/5A	1200A	50	5	5	3,5	100 x 50
M7708J.	TDH12 1250/5A	1250A	50	5	5	3,5	100 x 50
M7708K.	TDH12 1500/5A	1500A	50	7,5	7,5	5	100 x 50
M7708L.	TDH12 1600/5A	1600A	50	7,5	7,5	5	100 x 50

Creation date: 23/11/2026 - CIRCUTOR, SAU reserves the right to make technical changes or modify the content/images of this document without prior notice, in order to improve its reliability, functionality, design or for other reasons.
It accepts no liability for any errors, inaccuracies or possible lack of information in this document.



TDH5.2 100/5A

High precision current transformers

Code: M770A5.

CODE	TYPE	Input current	Inner diameter (mm)	Class 0,2 Power (VA)	Class 0,5S Power (VA)	Class 0,2S Power (VA)	Flat strip(mm)
M7708M.	TDH12 2000/5A	2000A	50	10	10	7,5	100 x 50
M7708N.	TDH12 2500/5A	2500A	50	10	10	7,5	100 x 50
M7708P.	TDH12 3000/5A	3000A	50	15	15	10	100 x 50
M7708Q.	TDH12 4000/5A	4000A	50	20	20	15	100 x 50

For other configurations see table of additional features

Creation date: 23/11/2026 - CIRCUTOR, SAU reserves the right to make technical changes or modify the content/images of this document without prior notice, in order to improve its reliability, functionality, design or for other reasons.
It accepts no liability for any errors, inaccuracies or possible lack of information in this document.



TDH5.2 100/5A

High precision current transformers

Code: M770A5.

Dimensions

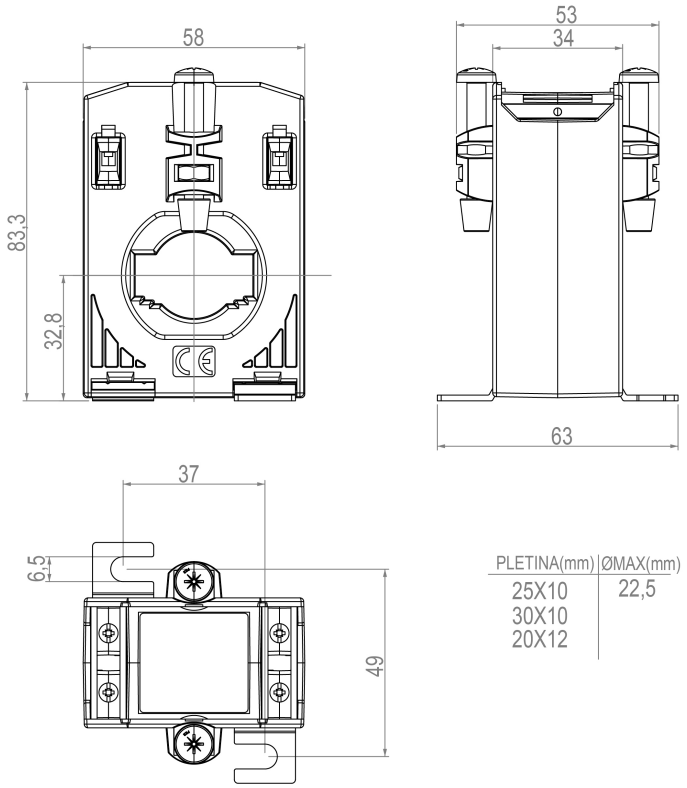

PLETINA(mm)	ØMAX(mm)
25X10	22,5
30X10	
20X12	

Connections

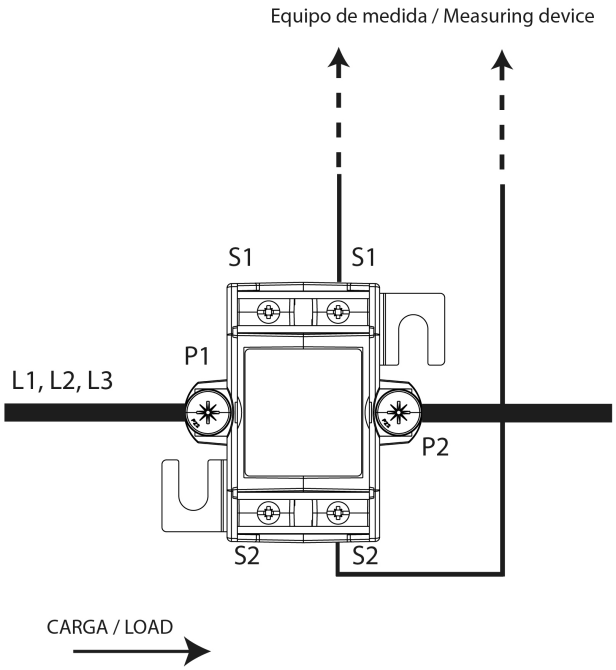

Creation date: 23/11/2026 - CIRCUTOR, SAU reserves the right to make technical changes or modify the content/images of this document without prior notice, in order to improve its reliability, functionality, design or for other reasons.
It accepts no liability for any errors, inaccuracies or possible lack of information in this document.