

TD5 150/5A

TD5 150/5A, Current transformer

Code: M75027.

> Flat strip(mm): 15 x 15 | 20 x 10 | 25 x 5
> Inner diameter (mm): 20
> System: Single-phase
> Class 0,5 Power (VA): 1,5
> Class 1 Power (VA): 2,5
> Class 3 Power (VA): 3,75
> Measurement Range (A): 150/5
> Input current: 150 A
> Transformer type: Closed core

Description

The **TD** series transformers are current transformers with an improved design that meet all the needs of today's installations. They are versatile devices when it comes to mounting and fixing, and they are sealable, with the aim of avoiding any manipulation.

Main features:

- Type: bar entrance
- From 40 to 4000 A
- Test Report
- DIN rail fixing accessory
- Sealable
- Secondary .../5 A, .../1 A and .../250 mA (consult availability)
- Diameters from 21 to 63 mm

Application

These transformers have been conceived to convert nominal currents in any installation to current values adjusted to measurement devices.



TD5 150/5A

Current transformer

Code: M75027.

Specifications

Electrical characteristics

Safety factor (SF)	5
Power	1,5 VA(Class 0.5) , 2,5 VA(Class 1) , 3,75 VA(Class 3)
Insulation voltage between terminals S1-S2	3 kV

Mechanical characteristics

Size (mm) width x height x depth	58 x 84 x 53 (mm)
Envelope	Plastic wrap V0 self-extinguishing, UL 94
Fastening	DIN rail with accessory
Weight (kg)	0,272

Environmental characteristics

Thermal Class	Class B (+130 °C)
Protection class	IP 20
Relative humidity (without condensation)	15 ... 95 %
Storage temperature	-40 ... +85 °C
Working temperature	-5 ... +40 °C

Specific technical characteristics of current sensors

Inner diameter Ø (mm)	21
Operating voltage	0,72 kV~ máx.

Current measurement circuit

Nominal frequency	50 / 60 Hz
Primary current measurement	150 A
Dynamic current (Idyn)	2,5 Ith
Thermal short-circuit current (Ith)	60 In
Transformation ratio	... / 5 A

Standards

Electrical safety, Maximum height (m)	2000
Standards	IEC 61869-1, IEC 61869-2

TD

Current transformers narrow section

CODE	TYPE	Useful cross-section (mm)	Flat strip(mm)	Class 0,5 Power (VA)	Class 1 Power (VA)	Class 3 Power (VA)	Measurement Range (A)



TD5 150/5A

Current transformer

Code: M75027.

CODE	TYPE	Useful cross-section (mm)	Flat strip(mm)	Class 0,5 Power (VA)	Class 1 Power (VA)	Class 3 Power (VA)	Measurement Range (A)
TD4							
M75011.	TD4 40/5A	20		-	-	1,25	40/5
M75012.	TD4 50/5A	20		-	1	1,5	50/5
M75013.	TD4 60/5A	20		-	1,25	2,5	60/5
M75014.	TD4 75/5A	20		-	1,5	3,75	75/5
M75015.	TD4 100/5A	20		1,5	2,5	5	100/5
M75016.	TD4 125/5A	20		2,5	3,75	5	125/5
M75017.	TD4 150/5A	20		3,75	5	5	150/5
M75018.	TD4 200/5A	20		5	7,5	7,5	200/5
TD5							
M75022.	TD5 50/5A	20	15 x 15 | 20 x 10 | 25 x 5	-	0,5	1,5	50/5
M75023.	TD5 60/5A	20	15 x 15 | 20 x 10 | 25 x 5	-	1	2,5	60/5
M75024.	TD5 75/5A	20	15 x 15 | 20 x 10 | 25 x 5	-	1,5	3,5	75/5
M75025.	TD5 100/5A	20	15 x 15 | 20 x 10 | 25 x 5	1,5	2,5	3,75	100/5
M75026.	TD5 125/5A	20	15 x 15 | 20 x 10 | 25 x 5	1,5	2,5	3,75	125/5
M75027.	TD5 150/5A	20	15 x 15 | 20 x 10 | 25 x 5	1,5	2,5	3,75	150/5
M75028.	TD5 200/5A	20	15 x 15 | 20 x 10 | 25 x 5	2,5	3,75	5	200/5
M75029.	TD5 250/5A	20	15 x 15 | 20 x 10 | 25 x 5	2,5	3,75	5	250/5
TD5.2							
M750A5.	TD5.2 100/5A	22	25 x 10 | 30 x 10 | 20 x 12	-	-	1	100/5
M750A6.	TD5.2 125/5A	22	25 x 10 | 30 x 10 | 20 x 12	-	1	1,5	125/5
M750A7.	TD5.2 150/5A	22	25 x 10 | 30 x 10 | 20 x 12	1	1,5	2,5	150/5
M750A8.	TD5.2 200/5A	22	25 x 10 | 30 x 10 | 20 x 12	1,5	2,5	3,5	200/5
M750A9.	TD5.2 250/5A	22	25 x 10 | 30 x 10 | 20 x 12	2,5	3,5	5	250/5
M750AA.	TD5.2 300/5A	22	25 x 10 | 30 x 10 | 20 x 12	2,5	3,5	5	300/5
M750AB.	TD5.2 400/5A	22	25 x 10 | 30 x 10 | 20 x 12	2,5	3,5	5	400/5
M750AC.	TD5.2 500/5A	22	25 x 10 | 30 x 10 | 20 x 12	5	7,5	10	500/5
M750AD.	TD5.2 600/5A	22	25 x 10 | 30 x 10 | 20 x 12	5	7,5	10	600/5
TD6.2							
M75055.	TD6.2 100/5A	25	25 x 12 |30 x 10 |20 x 20	2,5	2,5	3,5	100/5
M75056.	TD6.2 125/5A	25	25 x 12 | 30 x 10 | 20 x 20	1,5	3,5	5	125/5
M75057.	TD6.2 150/5A	25	25 x 12 | 30 x 10 | 20 x 20	2,5	3,5	5	150/5
M75058.	TD6.2 200/5A	25	25 x 12 | 30 x 10 | 20 x 20	3,5	5	5	200/5
M75059.	TD6.2 250/5A	25	25 x 12 | 30 x 10 | 20 x 20	3,5	5	5	250/5
M7505A.	TD6.2 300/5A	25	25 x 12 | 30 x 10 | 20 x 20	5	7,5	7,5	300/5
M7505B.	TD6.2 400/5A	25	25 x 12 | 30 x 10 | 20 x 20	5	7,5	7,5	400/5
M7505C.	TD6.2 500/5A	25	25 x 12 | 30 x 10 | 20 x 20	5	7,5	10	500/5
M7505D.	TD6.2 600/5A	25	25 x 12 | 30 x 10 | 20 x 20	5	7,5	10	600/5

Creation date: 24/11/2026 - CIRCUTOR, SAU reserves the right to make technical changes or modify the content/images of this document without prior notice, in order to improve its reliability, functionality, design or for other reasons.
It accepts no liability for any errors, inaccuracies or possible lack of information in this document.



TD5 150/5A

Current transformer

Code: M75027.

CODE	TYPE	Useful cross-section (mm)	Flat strip(mm)	Class 0,5 Power (VA)	Class 1 Power (VA)	Class 3 Power (VA)	Measurement Range (A)
TD6							
M75047.	TD6 150/5A	28	20 x 25 |30 x 15 |40 x 10	1	2,5	3,5	150/5
M75048.	TD6 200/5A	28	20 x 25 | 30 x 15 | 40 x 10	1,5	3,5	5	200/5
M75049.	TD6 250/5A	28	20 x 25 | 30 x 15 | 40 x 10	2,5	5	5	250/5
M7504A.	TD6 300/5A	28	20 x 25 | 30 x 15 | 40 x 10	2,5	5	5	300/5
M7504B.	TD6 400/5A	28	20 x 25 | 30 x 15 | 40 x 10	2,5	5	5	400/5
M7504C.	TD6 500/5A	28	20 x 25 | 30 x 15 | 40 x 10	5	7,5	7,5	500/5
M7504D.	TD6 600/5A	28	20 x 25 | 30 x 15 | 40 x 10	5	7,5	7,5	600/5
M7504E.	TD6 750/5A	28	20 x 25 | 30 x 15 | 40 x 10	5	7,5	10	750/5
M7504F.	TD6 800/5A	28	20 x 25 | 30 x 15 | 40 x 10	5	7,5	10	800/5
TD8							
M7506A.	TD8 300/5A	43	50 x 30 | 60 x 12| 13 x 45	2,5	3,5	3,5	300/5
M7506B.	TD8 400/5A	43	50 x 30 | 60 x 12| 13 x 45	2,5	3,5	5	400/5
M7506C.	TD8 500/5A	43	50 x 30 | 60 x 12| 13 x 45	2,5	5	5	500/5
M7506D.	TD8 600/5A	43	50 x 30 | 60 x 12| 13 x 45	2,5	5	5	600/5
M7506E.	TD8 750/5A	43	50 x 30 | 60 x 12| 13 x 45	2,5	5	5	750/5
M7506F.	TD8 800/5A	43	50 x 30 | 60 x 12| 13 x 45	5	7,5	7,5	800/5
M7506G.	TD8 1000/5A	43	50 x 30 | 60 x 12| 13 x 45	5	7,5	10	1000/5
M7506H.	TD8 1200/5A	43	50 x 30 | 60 x 12| 13 x 45	5	7,5	10	1200/5
M7506J.	TD8 1250/5A	43	50 x 30 | 60 x 12| 13 x 45	7,5	10	10	1250/5
M7506K.	TD8 1500/5A	43	50 x 30 | 60 x 12| 13 x 45	7,5	10	15	1500/5
M7506L.	TD8 1600/5A	43	50 x 30 | 60 x 12| 13 x 45	7,5	10	15	1600/5
TD10							
M7507D.	TD10 600/5A	63	50 x 50 | 60 x 30 | 80 x 30	2,5	5	7,5	600/5
M7507E.	TD10 750/5A	63	50 x 50 | 60 x 30 | 80 x 30	2,5	5	7,5	750/5
M7507F.	TD10 800/5A	63	50 x 50 | 60 x 30 | 80 x 30	2,5	5	7,5	800/5
M7507G.	TD10 1000/5A	63	50 x 50 | 60 x 30 | 80 x 30	2,5	5	7,5	1000/5
M7507H.	TD10 1200/5A	63	50 x 50 | 60 x 30 | 80 x 30	2,5	5	7,5	1200/5
M7507J.	TD10 1250/5A	63	50 x 50 | 60 x 30 | 80 x 30	2,5	5	7,5	1250/5
M7507K.	TD10 1500/5A	63	50 x 50 | 60 x 30 | 80 x 30	5	10	15	1500/5
M7507L.	TD10 1600/5A	63	50 x 50 | 60 x 30 | 80 x 30	5	10	15	1600/5
M7507M.	TD10 2000/5A	63	50 x 50 | 60 x 30 | 80 x 30	5	10	15	2000/5
M7507N.	TD10 2500/5A	63	50 x 50 | 60 x 30 | 80 x 30	5	10	15	2500/5
M7507P.	TD10 3000/5A	63	50 x 50 | 60 x 30 | 80 x 30	5	10	15	3000/5
TD12							
M7508F.	TD12 800/5A	50	100 x 50	2,5	5	7,5	800/5
M7508G.	TD12 1000/5A	50	100 x 50	2,5	5	7,5	1000/5
M7508H.	TD12 1200/5A	50	100 x 50	5	10	15	1200/5

Creation date: 24/11/2026 - CIRCUTOR, SAU reserves the right to make technical changes or modify the content/images of this document without prior notice, in order to improve its reliability, functionality, design or for other reasons.
It accepts no liability for any errors, inaccuracies or possible lack of information in this document.



TD5 150/5A

Current transformer

Code: M75027.

CODE	TYPE	Useful cross-section (mm)	Flat strip(mm)	Class 0,5 Power (VA)	Class 1 Power (VA)	Class 3 Power (VA)	Measurement Range (A)
M7508J.	TD12 1250/5A	50	100 x 50	5	10	15	1250/5
M7508K.	TD12 1500/5A	50	100 x 50	7,5	15	20	1500/5
M7508L.	TD12 1600/5A	50	100 x 50	7,5	15	20	1600/5
M7508M.	TD12 2000/5A	50	100 x 50	7,5	15	20	2000/5
M7508N.	TD12 2500/5A	50	100 x 50	10	20	25	2500/5
M7508P.	TD12 3000/5A	50	100 x 50	10	20	25	3000/5
M7508Q.	TD12 4000/5A	50	100 x 50	15	20	25	4000/5

For other configurations see table of additional features



TD5 150/5A

Current transformer

Code: M75027.

Dimensions

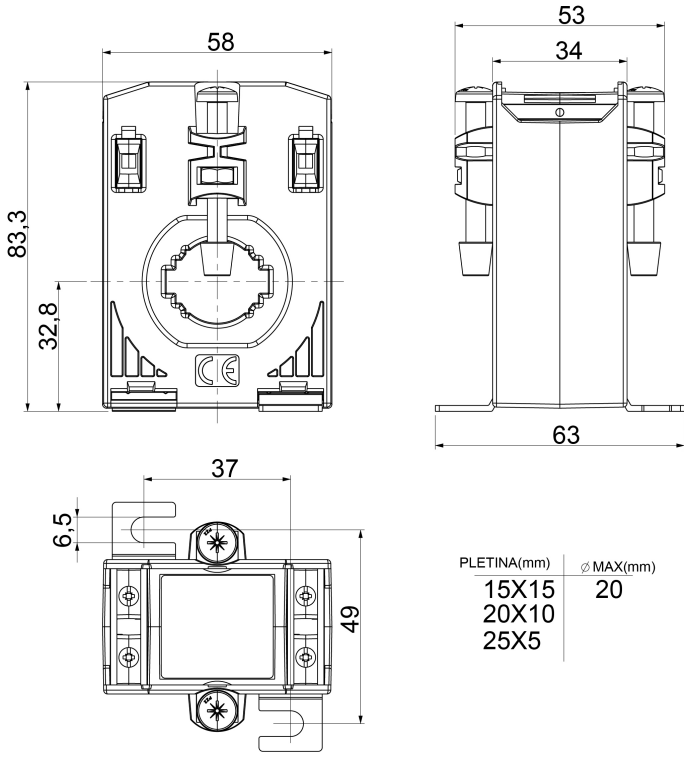

Connections

