

# MC1-35-50/100/150 A

MC1-35-50/100/150 A, Current transformer

Code: M73116.

> Inner diameter (mm): 35
> System: Single-phase
> Class 0,5 Power (VA): 0,25
> Measurement Range (A): 50/100/150
> Max. Current (A): 150
> Input current: 50/100/150 A
> Transformer type: Closed core

## Description

The transformers of the MC1 range are efficient current transformers. This range of transformers offers a measurement range from 150...2,000 A. They operate with a 250 mA secondary and feature 3 measurement ranges in the same transformer: simply changing a connection cable and the ratio selected in the measurement unit. MC1 transformers are only compatible with CIRCUTOR's MC range.

## Application

- In installations where the electric supply can be interrupted to install transformers.
- Very useful for installing in places where the exact nominal current range is not known.



# MC1-35-50/100/150 A

Current transformers, MC1 single-phase

Code: M73116.

## Specifications

### Electrical characteristics

| | |
|---|---|
| Safety factor (SF) | FS 5 |
| Power | 0.25 VA (Class 0,5) |
| Insulation voltage between terminals S1-S2 | 3 kV |

### Mechanical characteristics

| | |
|---|---|
| Size (mm) width x height x depth | 32 x 46 x 46 (mm) |
| Envelope | Plastic V0 self-extinguishing |
| Weight (kg) | 0,171 |

### Environmental characteristics

| | |
|---|---|
| Thermal Class | Class B (+130 °C) |
| Protection class | IP 20 |

### Specific technical characteristics of current sensors

| | |
|---|---|
| Inner diameter Ø (mm) | 35 |
| Operating voltage | 0,72 kV~ máx. |

### Current measurement circuit

| | |
|---|---|
| Nominal frequency | 50 / 60 Hz |
| Primary current measurement | 50/100/150 |
| Dynamic current (Idyn) | 2,5 Ith |
| Thermal short-circuit current (Ith) | 60 In |
| Transformation ratio | .../ 250 mA |

### Standards

| | |
|---|---|
| Standards | IEC 60044-1 |

### Measurement accuracy

| | |
|---|---|
| Accuracy | Clase 0,5 |

**MC1**
Triple scale single-phase efficient transformers

| CODE | TYPE | Measurement Range (A) | Inner diameter (mm) | Class 0,5 Power (VA) |
|---|---|---|---|---|
| M73112. | MC1-15-75 | 75 | 15 | 0,25 |
| M73118. | MC1-20-50/100/150 A | 50/100/150 | 20 | 0,25 |



# MC1-35-50/100/150 A

Current transformers, MC1 single-phase

Code: M73116.

| CODE | TYPE | Measurement Range (A) | Inner diameter (mm) | Class 0,5 Power (VA) |
|---|---|---|---|---|
| M73116. | MC1-35-50/100/150 A | 50/100/150 | 35 | 0,25 |
| M73113. | MC1-20-150/200/250 A | 150/200/250 | 20 | 0,25 |
| M73114. | MC1-30-250/400/500 A | 250/400/500 | 30 | 0,25 |
| M73115. | MC1-55-500/1000/1500 A | 500/1000/1500 | 55 | 0,25 |
| M73117. | MC1-80 1000/1500/2000 A | 1000/1500/2000 | 80 | 0,25 |

The MC/SC3 transformers with a 250 mA output are only compatible with network analysers type MC



Creation date: 23/11/2026 - CIRCUTOR, SAU reserves the right to make technical changes or modify the content/images of this document without prior notice, in order to improve its reliability, functionality, design or for other reasons.
It accepts no liability for any errors, inaccuracies or possible lack of information in this document.



# MC1-35-50/100/150 A

Current transformers, MC1 single-phase

Code: M73116.

## Dimensions

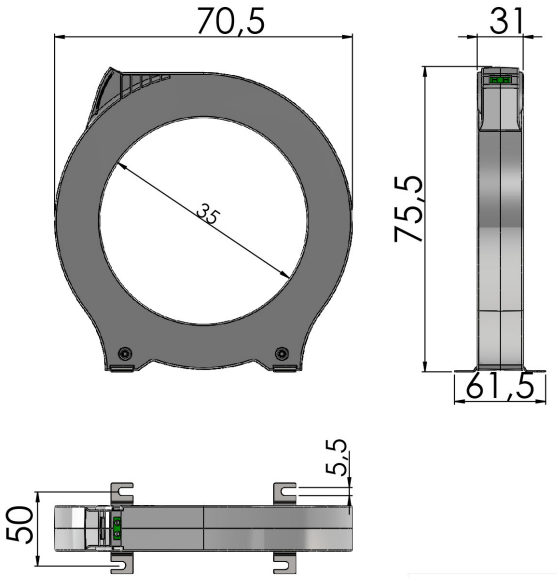


## Connections

