

# VT4023 400V/230V

VT4023 400V/230V, Voltage Transformer

Code: M72322.

> Class 0,5 Power (VA): 10
> Class 1 Power (VA): 25
> Relation: 400/230V

## Description

- Accuracy class 1
- Power 25 V·A

## Application

Used in AC electricity lines to obtain a lower voltage in the secondary than in the primary, so that it can be measured by electronic equipment



# VT4023 400V/230V

Measurement voltage transformers

Code: M72322.

## Specifications

### Mechanical characteristics

| | |
|---|---|
| Size (mm) width x height x depth | 103 x 104 x 100 (mm) |
| Weight (kg) | 3,2 |

**VT**
Measurement voltage transformers

| CODE | TYPE | Class 0,5 Power (VA) | Class 1 Power (VA) |
|---|---|---|---|
| M72311. | VT2311 230V/110V | 10 | 25 |
| M72352. | VT3823 380V/230V | 10 | 25 |
| M72321. | VT4011 400V/110V | 10 | 25 |
| M72322. | VT4023 400V/230V | 10 | 25 |
| M72331. | VT4411 440V/110V | 10 | 25 |
| M72332. | VT4423 440V/230V | 10 | 25 |
| M72341. | VT4811 480V/110V | 10 | 25 |
| M72342. | VT4823 480V/230V | 10 | 25 |
| M72381. | VT7011 700V/110V | 10 | 25 |
| M72382. | VT7023 700V/230V | 10 | 25 |

For three-phase networks, 3 units are required.
For other voltage ratios, please ask.


Creation date: 23/11/2026 - CIRCUTOR, SAU reserves the right to make technical changes or modify the content/images of this document without prior notice, in order to improve its reliability, functionality, design or for other reasons.
It accepts no liability for any errors, inaccuracies or possible lack of information in this document.



# VT4023 400V/230V

Measurement voltage transformers

Code: M72322.

## Dimensions

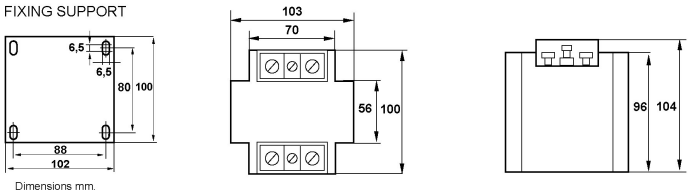


## Connections

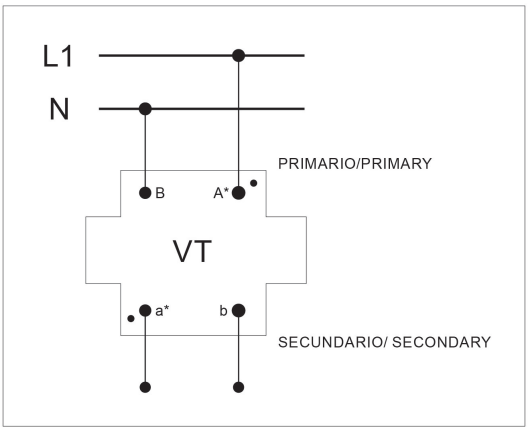




Creation date: 23/11/2026 - CIRCUTOR, SAU reserves the right to make technical changes or modify the content/images of this document without prior notice, in order to improve its reliability, functionality, design or for other reasons.
It accepts no liability for any errors, inaccuracies or possible lack of information in this document.