

VT2311 230V/110V

VT2311 230V/110V, Voltage Transformer

Code: M72311.

> Class 0,5 Power (VA): 10
> Class 1 Power (VA): 25
> Relation: 230/110V

Description

- Accuracy class 1
- Power 25 V·A

Application

Used in AC electricity lines to obtain a lower voltage in the secondary than in the primary, so that it can be measured by electronic equipment



VT2311 230V/110V

Measurement voltage transformers

Code: M72311.

Specifications

Mechanical characteristics

Size (mm) width x height x depth	103 x 104 x 100 (mm)
Weight (kg)	3

VT
Measurement voltage transformers

CODE	TYPE	Class 0,5 Power (VA)	Class 1 Power (VA)
M72311.	VT2311 230V/110V	10	25
M72352.	VT3823 380V/230V	10	25
M72321.	VT4011 400V/110V	10	25
M72322.	VT4023 400V/230V	10	25
M72331.	VT4411 440V/110V	10	25
M72332.	VT4423 440V/230V	10	25
M72341.	VT4811 480V/110V	10	25
M72342.	VT4823 480V/230V	10	25
M72381.	VT7011 700V/110V	10	25
M72382.	VT7023 700V/230V	10	25

For three-phase networks, 3 units are required.
For other voltage ratios, please ask.

Creation date: 24/11/2026 - CIRCUTOR, SAU reserves the right to make technical changes or modify the content/images of this document without prior notice, in order to improve its reliability, functionality, design or for other reasons.
It accepts no liability for any errors, inaccuracies or possible lack of information in this document.



VT2311 230V/110V

Measurement voltage transformers

Code: M72311.

Dimensions

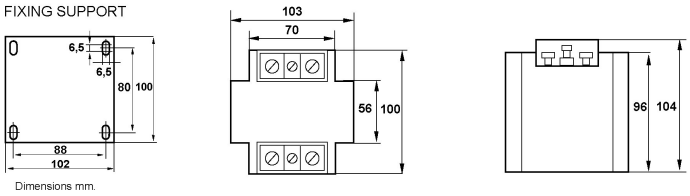

Connections

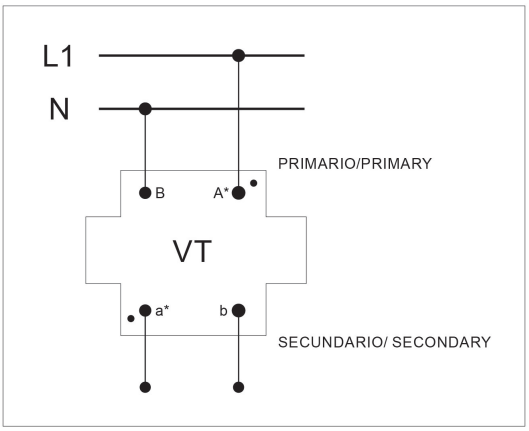

Creation date: 24/11/2026 - CIRCUTOR, SAU reserves the right to make technical changes or modify the content/images of this document without prior notice, in order to improve its reliability, functionality, design or for other reasons.
It accepts no liability for any errors, inaccuracies or possible lack of information in this document.