

TCM-420-25-20A

TCM-420-25-20A, Current transformer with converter 4 ... 20 mA

Code: M71044. **CONSULTAR DISPONIBILIDAD**

> Inner diameter (mm): 25
> Analog output: 4...20 mA
> Measurement Range (A): 20
> Input current: 20 A
> Transformer type: Current transformer with 4 ... 20 mA converter

Specifications

Auxiliary power supply

Voltage	230 Vac

Mechanical characteristics

Size (mm) width x height x depth	70 x 87 x 70 (mm)
Weight (kg)	0,177

Environmental characteristics

Working temperature	-10°...+50 °C

Specific technical characteristics of current sensors

Inner diameter Ø (mm)	25
Operating voltage	0,72 kV~ max.

Current measurement circuit

Nominal frequency	64 / 60 Hz
Primary current measurement	20 A
Permanent overload	1,5 In
Transformation ratio	4 ... 20 mA

Standards

Standards	IEC 44-1, UNE 21 088-1, IEC 664, VDE0110, VDE0414, UL 94, IEC 1010-1, EN 61010-1

Measurement accuracy

Accuracy	±1,5% In



TCM-420-25-20A

Code: M71044.

Dimensions

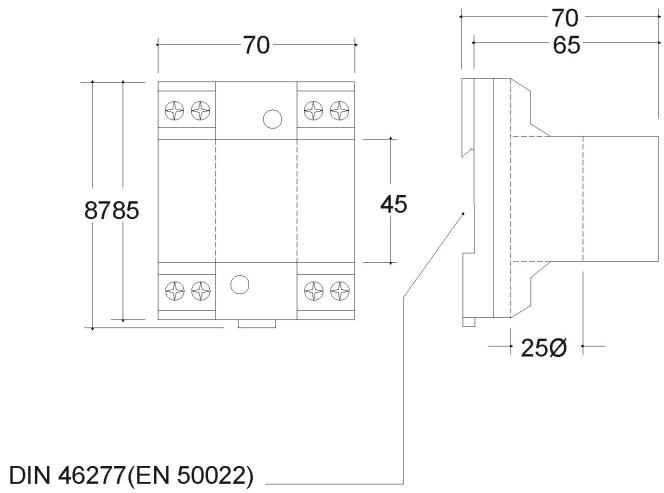

Creation date: 23/11/2026 - CIRCUTOR, SAU reserves the right to make technical changes or modify the content/images of this document without prior notice, in order to improve its reliability, functionality, design or for other reasons.
It accepts no liability for any errors, inaccuracies or possible lack of information in this document.