

TSR-2

TSR-2, Adding Transformer

Code: M70701.

> Measuring Channels: 2
> Class 0,5 Power (VA): 15
> Class 1 Power (VA): 30
> Input current: 5 A
> Transformer type: Adding Transformer

Description

- Accuracy class 0.5
- Power 15 V·A
- The transformers added must have the same ratio
- No input must be without a connection

Application

Used to add the current to various AC electrical lines to obtain a common output current that is proportional to the sum of all currents. The current of various lines can be measured in a single unit.

Creation date: 23/11/2026 - CIRCUTOR, SAU reserves the right to make technical changes or modify the content/images of this document without prior notice, in order to improve its reliability, functionality, design or for other reasons.
It accepts no liability for any errors, inaccuracies or possible lack of information in this document.



TSR-2

Current adding transformers fixed on a DIN rail

Code: M70701.

Specifications

Mechanical characteristics

Size (mm) width x height x depth	110 x 72.5 x 110 (mm)
Weight (kg)	0,976

TSR
Current adding transformer

CODE	TYPE	Measurement Range (A)	Class 0,5 Power (VA)	Class 1 Power (VA)	Class 3 Power (VA)
M70701.	TSR-2	5 A	15	30	-
M70702.	TSR-3	5 A	15	30	-
M70703.	TSR-4	5 A	15	30	-
M70704.	TSR-5	5 A	15	30	-

Current adding transformers must have the same primary ratio.
For three-phase networks, one transformer per phase is required.
It is fed from the same measure.
For other ratios, please ask.

Creation date: 23/11/2026 - CIRCUTOR, SAU reserves the right to make technical changes or modify the content/images of this document without prior notice, in order to improve its reliability, functionality, design or for other reasons.
It accepts no liability for any errors, inaccuracies or possible lack of information in this document.



TSR-2

Current adding transformers fixed on a DIN rail

Code: M70701.

Dimensions

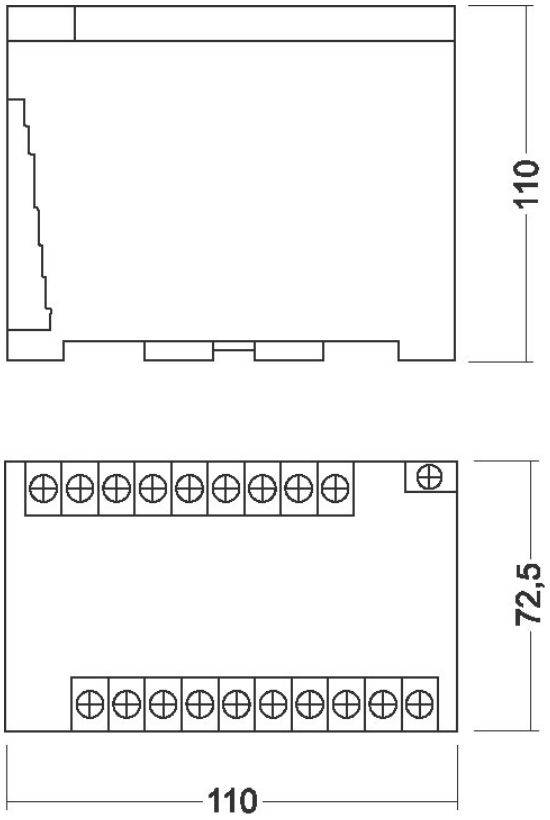

TSR

Connections

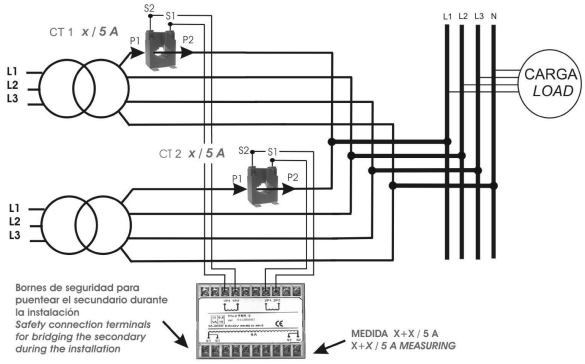

MODELO	ENTRADAS	POTENCIA	CODIGO
TSR-2	2	15VA. Cl 0,5	M70701
TSR-3	3	15VA. Cl 0,5	M70702
TSR-4	4	15VA. Cl 0,5	M70703
TSR-5	5	15VA. Cl 0,5	M70704