

TM45 50 /5A

TM45 50 /5A, Current transformers, winding primary, DIN rail

Code: M70608.

> System: Single-phase
> Class 0,5 Power (VA): 2,5
> Class 1 Power (VA): 5
> Class 3 Power (VA): 7
> Measurement Range (A): 50/5
> Input current: 50 A
> Transformer type: Winding primary

Description

- Types: from 1 to 40 A
- Wound primary
- Assembly on DIN rail

Application

Converting a high nominal current to a lower current so that it can be measured by the unit. In installations where the nominal current is not too high or a transformer has to be installed on the DIN rail.

Creation date: 23/11/2026 - CIRCUTOR, SAU reserves the right to make technical changes or modify the content/images of this document without prior notice, in order to improve its reliability, functionality, design or for other reasons.
It accepts no liability for any errors, inaccuracies or possible lack of information in this document.



TM45 50 /5A

Current transformers, busbar and winding primary

Code: M70608.

Specifications

Electrical characteristics

Safety factor (SF)	FS < 5
Power	2.5 VA (Class 0,5)

Mechanical characteristics

Size (mm) width x height x depth	52.5 x 85 x 70 (mm)
Envelope	Plastic wrap V0 self-extinguishing
Fastening	DIN rail
Weight (kg)	0,28

Environmental characteristics

Thermal Class	Class A (+105 °C)

Specific technical characteristics of current sensors

Operating voltage	0,72 kV~ max.

Current measurement circuit

Nominal frequency	50 / 60 Hz
Primary current measurement	50 A
Dynamic current (Idyn)	2,5 Ith
Thermal short-circuit current (Ith)	60 In
Transformation ratio	... / 5 A

Standards

Standards	IEC 44-1, UNE 21 088-1, UL 94, VDE 0414

TM45
Current transformers, winding primary, DIN rail

CODE	TYPE	Measurement Range (A)	Class 0,5 Power (VA)	Class 1 Power (VA)	Class 3 Power (VA)
M70601.	TM45 5 /5A	5/5	2,5	5	7
M70602.	TM45 10 /5A	10/5	2,5	5	7
M70603.	TM45 15 /5A	15/5	2,5	5	7
M70604.	TM45 20 /5A	20/5	2,5	5	7
M70605.	TM45 25/5A	25/5	2,5	5	7
M70606.	TM45 30 /5A	30/5	2,5	5	7
M70607.	TM45 40 /5A	40/5	2,5	5	7
M70608.	TM45 50 /5A	50/5	2,5	5	7

Creation date: 23/11/2026 - CIRCUTOR, SAU reserves the right to make technical changes or modify the content/images of this document without prior notice, in order to improve its reliability, functionality, design or for other reasons.
It accepts no liability for any errors, inaccuracies or possible lack of information in this document.



TM45 50 /5A

Current transformers, busbar and winding primary

Code: M70608.

CODE	TYPE	Measurement Range (A)	Class 0,5 Power (VA)	Class 1 Power (VA)	Class 3 Power (VA)
M70609.	TM45 1 /5A	1/5	2,5	5	7

For other configurations see table of additional features



TM45 50 /5A

Current transformers, busbar and winding primary

Code: M70608.

Dimensions

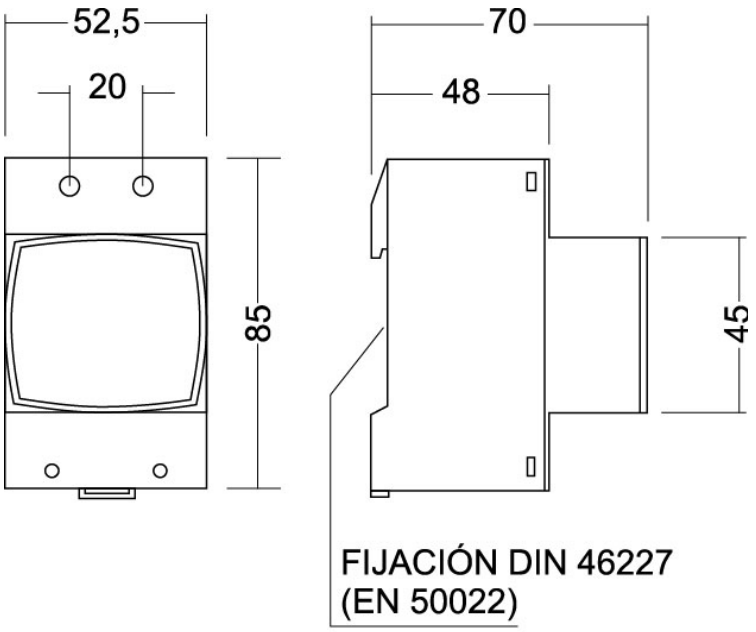

Connections

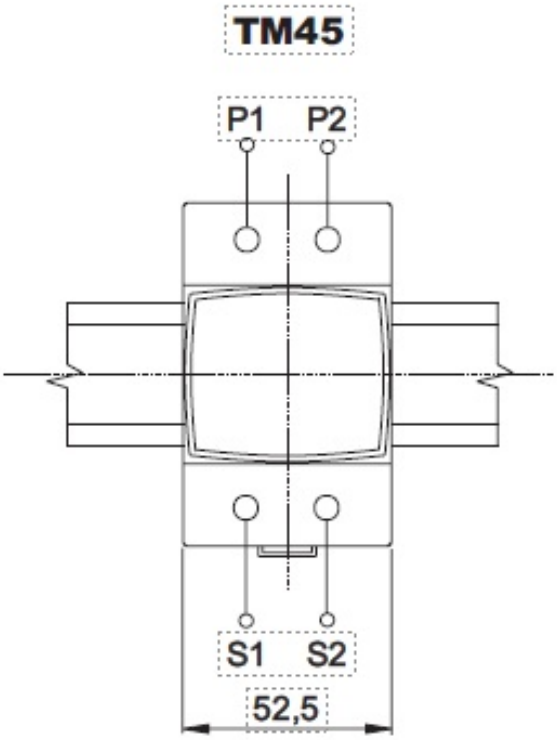

Creation date: 23/11/2026 - CIRCUTOR, SAU reserves the right to make technical changes or modify the content/images of this document without prior notice, in order to improve its reliability, functionality, design or for other reasons.
It accepts no liability for any errors, inaccuracies or possible lack of information in this document.