

TA210 25 /5A

TA210 25 /5A, Current transformers, winding primary

Code: M70545.

> System: Single-phase
> Class 0,5 Power (VA): 15
> Class 1 Power (VA): 20
> Class 3 Power (VA): 30
> Measurement Range (A): 25/5
> Input current: 25 A
> Transformer type: Winding primary

Description

- Types: from 5 to 400 A
- Wound primary

Application

Converting a high nominal current to a lower current so that it can be measured by the unit.
In installations where the nominal current is not too high or where the current requested from the secondary power transformer does not exceed 10 VA.



TA210 25 /5A

High-accuracy wound primary current transformer

Code: M70545.

Specifications

Electrical characteristics

Safety factor (SF)	FS < 5
Power	15 VA (Class 0,5)

Mechanical characteristics

Size (mm) width x height x depth	75 x 104.5 x 134 (mm)
Envelope	Plastic wrap V0 self-extinguishing
Fastening	DIN rail with accessory
Weight (kg)	0,7

Environmental characteristics

Thermal Class	Class A (+105 °C)

Specific technical characteristics of current sensors

Operating voltage	0,72 kV~ max.

Current measurement circuit

Nominal frequency	50 / 60 Hz
Primary current measurement	25 A
Dynamic current (Idyn)	2,5 Ith
Thermal short-circuit current (Ith)	60 In
Transformation ratio	... / 5 A

Standards

Standards	IEC 44-1, UNE 21 088-1, UL 94, VDE 0414

TA 210
Current transformers, winding primary

CODE	TYPE	Measurement Range (A)	Class 0,5 Power (VA)	Class 1 Power (VA)	Class 3 Power (VA)
TA210					
M70541.	TA210 5 /5A	5/5	15	20	30
M70542.	TA210 10 /5A	10/5	15	20	30
M70543.	TA210 15 /5A	15/5	15	20	30
M70544.	TA210 20 /5A	20/5	15	20	30
M70545.	TA210 25 /5A	25/5	15	20	30
M70546.	TA210 30 /5A	30/5	15	20	30

Creation date: 24/11/2026 - CIRCUTOR, SAU reserves the right to make technical changes or modify the content/images of this document without prior notice, in order to improve its reliability, functionality, design or for other reasons.
It accepts no liability for any errors, inaccuracies or possible lack of information in this document.



TA210 25 /5A

High-accuracy wound primary current transformer

Code: M70545.

CODE	TYPE	Measurement Range (A)	Class 0,5 Power (VA)	Class 1 Power (VA)	Class 3 Power (VA)
M70547.	TA210 40 /5A	40/5	15	20	30
M70548.	TA210 50 /5A	50/5	15	20	30
M70549.	TA210 60 /5A	60/5	15	20	30
M7054A.	TA210 75 /5A	75/5	15	20	30
M7054B.	TA210 100 /5A	100/5	15	20	30
M7054C.	TA210 125 /5A	125/5	15	20	30
M7054D.	TA210 150/5A	150/5	15	20	30
M7054E.	TA210 200 /5A	200/5	10	20	30
M7054F.	TA210 250 /5A	250/5	15	20	30
M7054G.	TA210 300 /5A	300/5	15	20	30
M7054H.	TA210 400 /5A	400/5	15	20	30
M7054K.	TA210 80/5A	80/5	15	20	30

Seleable terminal cover and anchorage base are included

Creation date: 24/11/2026 - CIRCUTOR, SAU reserves the right to make technical changes or modify the content/images of this document without prior notice, in order to improve its reliability, functionality, design or for other reasons.
It accepts no liability for any errors, inaccuracies or possible lack of information in this document.



TA210 25 /5A

High-accuracy wound primary current transformer

Code: M70545.

Dimensions

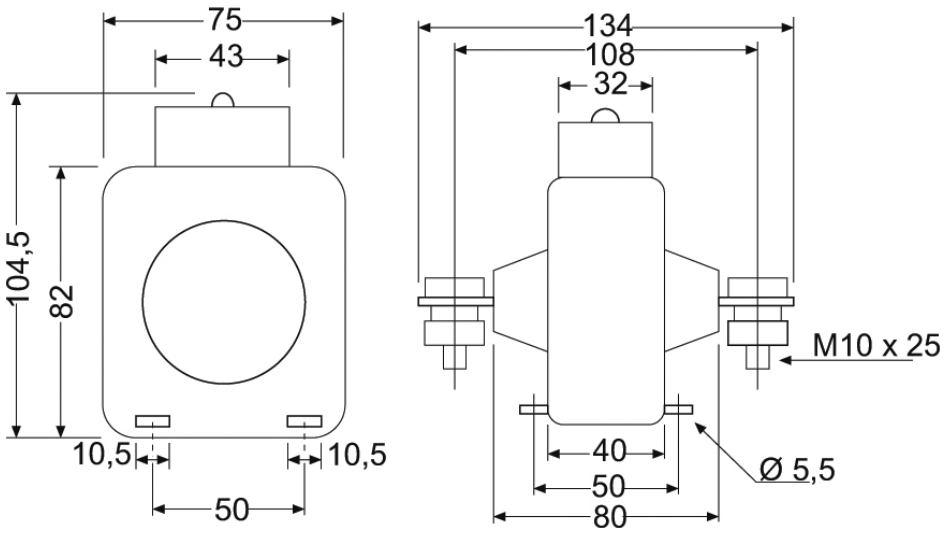

Creation date: 24/11/2026 - CIRCUTOR, SAU reserves the right to make technical changes or modify the content/images of this document without prior notice, in order to improve its reliability, functionality, design or for other reasons.
It accepts no liability for any errors, inaccuracies or possible lack of information in this document.