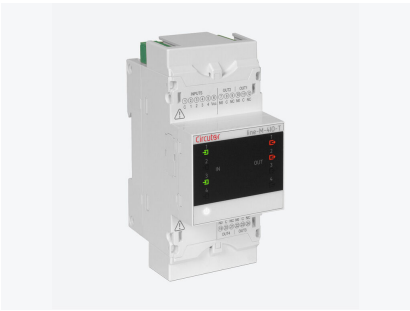

Line-M-410-T

Line-M-410-T, Expansion modules

Code: M58E01. **DESCATALOGADO**

> Protocol: Modbus RTU
> Communications: Bus-Line
> Transistor output: 4
> Digital inputs: 4
> Mounting: DIN rail

Description

Module with 4 floating transistor inputs and outputs.

The expansion modules of the Line range provide a simple way to extend the features of any version of line-EDS-Cloud, line-EDS-PS, or of the line-CVM-D32 network analyser.

They allow adding digital outputs and inputs, analogue inputs and outputs or any combination thereof, to the devices.

The modules are connected laterally and are detected automatically when the lateral connection is made, which greatly simplifies the installation and configuration of the modules.

Application

- Expansion of inputs/outputs from line-CVM-D32 or line-EDS network analysers.
- Management of up to 4 tariffs with activation of the different inputs to the module.
- Alarms can be programmed independently based on high/low values, hysteresis, timer on/off delays, normally open or closed rest state and interlocks.
- Generation of impulses through outputs to a transistor, fully and independently configurable based on any incremental parameter of active or reactive energy, either per total counter or per tariff.
- Track the status of components in the installation by using the status of the inputs to the module.

Creation date: 23/11/2026 - CIRCUTOR, SAU reserves the right to make technical changes or modify the content/images of this document without prior notice, in order to improve its reliability, functionality, design or for other reasons.
It accepts no liability for any errors, inaccuracies or possible lack of information in this document.



Line-M-410-T

Module with 4 transistor inputs and outputs

Code: M58E01.

Specifications

DC power supply

Consumption	max. 4 W

Mechanical characteristics

Size (mm) width x height x depth	52.5 x 118 x 70 (mm)
Envelope	Self-extinguishing V0 plastic
Fastening	DIN rail (IEC 60715)
Weight (kg)	0,16

Environmental characteristics

Protection class	IP30, Front: IP40
Relative humidity (without condensation)	5 ... 95%
Storage temperature	-20 ... +70 °C
Working temperature	-10 ... +50 °C

Voltage measurement circuit

Input impedance	3kΩ

Standards

Electrical safety, Maximum height (m)	2000
Electrical safety, Installation category	CAT III 300 V
Standards	UNE-EN 61010-1, UNE-EN 61000-6-2, UNE-EN 61000-6-4

User interface

LED	9 LED

Digital inputs

Input/output insulation	3,75 kV~
Quantity	4
Type	Optocoupler
Minimum signal width	10 ms

Digital transistor outputs

Pulse width	1 ms
Quantity	4
Type	Optocoupler NO
Maximum frequency	500 Hz
Maximum current	120mA
Maximum voltage	48Vcc



Line-M-4IO-T

Module with 4 transistor inputs and outputs

Code: M58E01.

Line-M-4IO-T
Expansion modules, Line series

CODE	TYPE	Protocol	Analogue Inputs	Transistor output	N° relays	Digital inputs	Analog output
Input/Output Modules							
D73001.	Line-M-4IO-T	Modbus RTU	-	4	-	4	-

Bus-Line: RS-485 communication system, with side connector between modules

Creation date: 23/11/2026 - CIRCUTOR, SAU reserves the right to make technical changes or modify the content/images of this document without prior notice, in order to improve its reliability, functionality, design or for other reasons.
It accepts no liability for any errors, inaccuracies or possible lack of information in this document.



Line-M-410-T

Module with 4 transistor inputs and outputs

Code: M58E01.

Dimensions

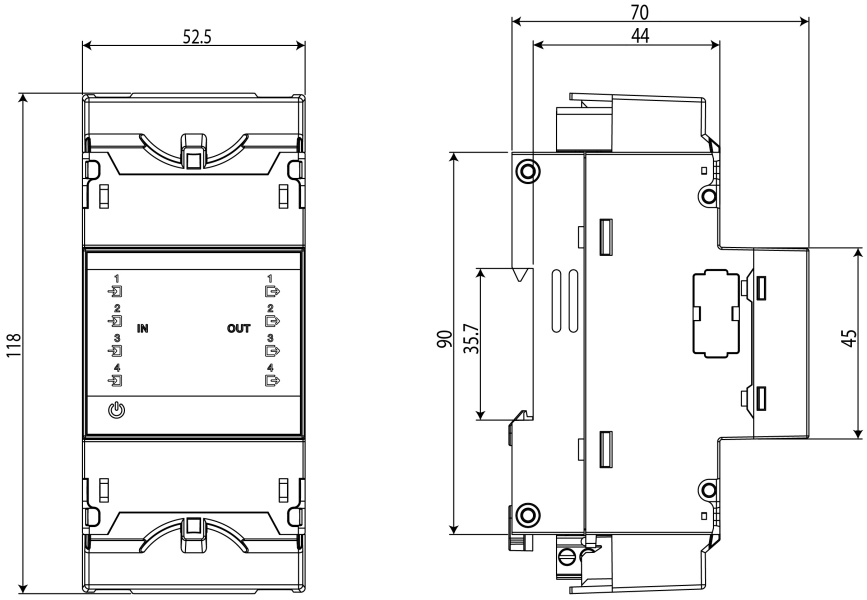

Connections

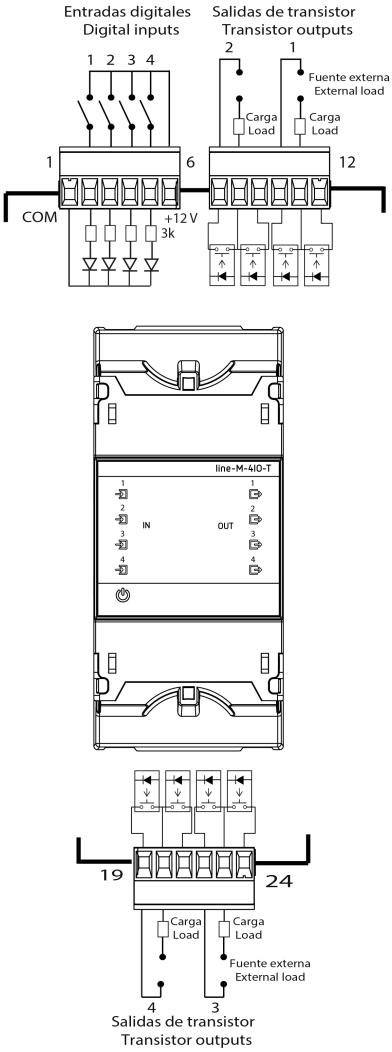

Creation date: 23/11/2026 - CIRCUTOR, SAU reserves the right to make technical changes or modify the content/images of this document without prior notice, in order to improve its reliability, functionality, design or for other reasons.
It accepts no liability for any errors, inaccuracies or possible lack of information in this document.