

CVM-C11-ITF-IN-485-ICT2

CVM-C11-ITF-IN-485-ICT2, Power analyzer 96 x 96

Code: M58541.

> Protocol: Modbus RTU | BACnet
> Communications: RS-485
> Transistor output: 2
> N° relays: 2
> Digital inputs: 2
> Measuring Channels: 4
> Harmonics: 31
> Power supply: 100...270 Vac/dc
> Input current: .../5 A | .../1 A
> Mounting: Pannel
> Modules: 96 x 96

Description

The **CVM-C11** is a power analyzer for a panel (96 x 96 mm) with power logging. Ideal for analyzing electrical and consumption quality variables, such as THD% for voltage and current, as well as individual harmonics for each phase up to the 31st. The inclusion of neutral current measurement lets users detect any imbalance, as well as detect overloads in the neutral conductor. Compact and versatile with measurements in 4 quadrants (consumption and generation), suitable for medium- and low-voltage installations.
Display and interface characteristics:

- User-defined parameter display.
- Backlit screen
- On-screen graphic display of instantaneous active power
- On-screen graphic display of all quadrants (Q1, Q2, Q3, Q4).
- On-screen numerical indication of the value of cos φ or PF.
- On-screen indication of the status of outputs, inputs and/or active tariff.
- LED alarm indicator
- Costs, kg of CO_2 emitted and operating time per tariff

Application

- Discrimination of power consumption into three tariffs. Ideal for determining consumption during three different work shifts or from three different energy sources (grid, generator and photovoltaic generation), using the digital inputs.
- Generation of an impulse signal related to cost, kg of CO_2 emitted or proportional to energy consumption or generation.
- Alarm control (2 relay outputs + 2 digital outputs) for any instantaneous parameter, whether measured or calculated. Adjustable based on maximum/minimum value, hysteresis (%), NO/NC, connection/disconnection delay and interlocks.

Creation date: 24/11/2026 - CIRCUTOR, SAU reserves the right to make technical changes or modify the content/images of this document without prior notice, in order to improve its reliability, functionality, design or for other reasons.
It accepts no liability for any errors, inaccuracies or possible lack of information in this document.



CVM-C11-ITF-IN-485-ICT2

Power analyzer for panel

Code: M58541.

Specifications

AC power supply

Installation category	CAT III 300 V
Consumption	2 ... 5 VA
Frequency	50 ... 60 Hz
Nominal voltage	100 ... 270 V ~ ± 10%

DC power supply

Installation category	CAT III 300 V
Nominal voltage	100 ... 270 Vdc ± 10%

Mechanical characteristics

Size (mm) width x height x depth	96 x 96 x 67.2 (mm)
Envelope	Self-extinguishing V0 plastic
Fastening	Panel
Weight (kg)	0,363

Environmental characteristics

Protection class	IP 54 (Front), IK 08
Relative humidity (without condensation)	5 ... 95%
Storage temperature	-25 ...+75 °C
Working temperature	-25 ...+70 °C

Standards

Certifications	UL 94
Electrical safety, Maximum height (m)	2000
Electrical safety, Installation category	CAT III 300 V
Electrical safety, Contamination level/class	Pollution resistance 2
Standards	EN IEC 61326-1, EN 61000-4-2, EN 61000-4-3, EN 61000-4-4, EN 61000-4-5, EN 61000-4-6, EN 61000-4-8, EN 61000-4-11, EN 61010-2-030, EN IEC 61557-12, EN 61010-1, UNE-EN 60068-2-2, UNE-EN 60068-2-1, UNE-EN 60068-2-78, UL 94

Current measurement circuit

Installation category	CAT III 300 V
Nominal current (In)	5A - .../5A , .../1 A
Minimum current measurement	10 mA

Voltage measurement circuit

Installation category	CAT III 300 V
Input impedance	> 1.7 MΩ



CVM-C11-ITF-IN-485-ICT2

Power analyzer for panel

Code: M58541.

Frequency measuring range	45 ... 65 Hz
Nominal voltage	230V Ph-N, 380V Ph-Ph
Minimum measurement voltage (Vstart)	10 V ~
Maximum value	300 VF-N /520 VF-F

User interface

LED	2 LED
Keyboard	3 keys
Display type	LCD Custom COG

Digital inputs

Input/output insulation	2000 V
Quantity	2
Type	NPN

Digital relay outputs

Electrical life (at maximum load)	$60x10^3$ cycles
Mechanical life	$10x10^6$ cycles
Maximum switching capacity	625 VA / 75 W (AC1)

Digital transistor outputs

Pulse width	30 ms a 400 ms (Programmable)
Quantity	2
Type	NPN
Maximum frequency	16 imp / s
Maximum current	50 mA
Maximum voltage	24 Vdc

Measurement accuracy

Phase current measurement	0.2% (1 ... 120% In)
Reactive power measurement (kvar)	1% ± 2 digit
Active power measurement (kW)	0.5% ± 2 digit
Power factor measurement	0.5 %
Phase voltage measurement	0.2% (5 ...120% Un)

Serial communication

Protocol	ModBus RTU|BACnet
Technology / Type	RS-485



CVM-C11-ITF-IN-485-ICT2

Power analyzer for panel

Code: M58541.

CVM-C11
Power analyzer, panel mounted 96 x96

CODE	TYPE	Measuring Channels	Input current	Transistor output	N° relays	Digital inputs	Communications	Protocol	Harmonics	Power supply
M58531.	CVM-C11-ITF-IN-ETH-ICT2	4	.../5 A | .../1 A	2	2	2	Ethernet	Modbus TCP/IP | BACnet	31	100...270 Vac/dc
M58541.	CVM-C11-ITF-IN-485-ICT2	4	.../5 A | .../1 A	2	2	2	RS-485	Modbus RTU | BACnet	31	100...270 Vac/dc
M58581.	CVM-C11-MC-IN-485-ICT2	4	.../250 mA	2	2	2	RS-485	Modbus RTU | BACnet	31	100...270 Vac/dc
M58561.	CVM-C11-FLEX-IN-485-ICT2	4	100 mV/kA	2	2	2	RS-485	Modbus RTU | BACnet	31	100...270 Vac/dc
Kits										
M58562.	CVM-C11-FLEX+3 MFC-FLEX-80									
M58563.	CVM-C11-FLEX+3 MFC-FLEX-125									
M58564.	CVM-C11-FLEX+4 MFC-FLEX-80									
M58565.	CVM-C11-FLEX+4 MFC-FLEX-125									

Creation date: 24/11/2026 - CIRCUTOR, SAU reserves the right to make technical changes or modify the content/images of this document without prior notice, in order to improve its reliability, functionality, design or for other reasons.
It accepts no liability for any errors, inaccuracies or possible lack of information in this document.



CVM-C11-ITF-IN-485-ICT2

Power analyzer for panel

Code: M58541.

Dimensions

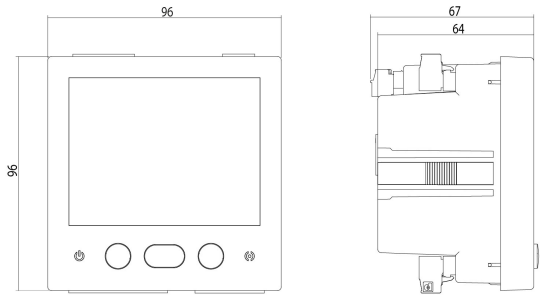

Connections

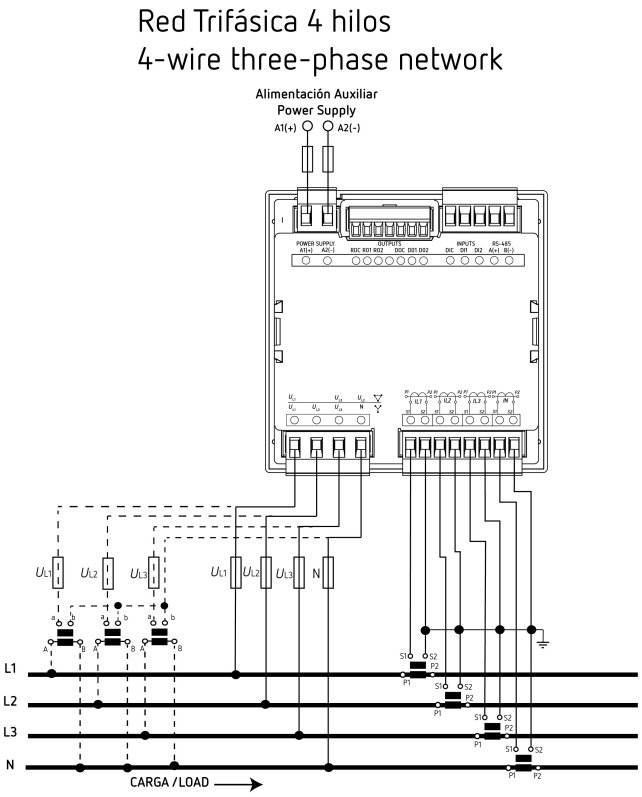

Creation date: 24/11/2026 - CIRCUTOR, SAU reserves the right to make technical changes or modify the content/images of this document without prior notice, in order to improve its reliability, functionality, design or for other reasons.
It accepts no liability for any errors, inaccuracies or possible lack of information in this document.