

M-CVM-AB-Modbus-TCP (switch)

M-CVM-AB-Modbus-TCP (switch), expansion module

Code: M56E0A.

> Protocol: Modbus TCP/IP (gateway to TCP)
> Memory: No
> Communications: Ethernet

Description

Expansion module with Modbus/TCP communications (Ethernet switch).

Application

It allows the Modbus TCP communication with SCADA systems in addition to Ethernet connectivity with other devices in cascade, avoiding long distances Ethernet cabling from centralized router or switch.

Creation date: 23/11/2026 - CIRCUTOR, SAU reserves the right to make technical changes or modify the content/images of this document without prior notice, in order to improve its reliability, functionality, design or for other reasons.
It accepts no liability for any errors, inaccuracies or possible lack of information in this document.



M-CVM-AB-Modbus-TCP (switch)

Expansion modules M-CVM-AB-Modbus/TCP (switch)

Code: M56E0A.

Specifications

DC power supply

Consumption	2W

Mechanical characteristics

Size (mm) width x height x depth	90 x 90 x 90 (mm)
Envelope	Self-extinguishing V0 plastic
Fastening	Panel
Weight (kg)	0,12

Environmental characteristics

Protection class	IP 30
Relative humidity (without condensation)	5 ... 95%
Storage temperature	-20... +80 °C
Working temperature	-10...+50 °C

Standards

Certifications	UL/CSA 61010-1 3rd edition
Electrical safety, Maximum height (m)	2000
Standards	IEC 61010, UNE-EN 61000-6-2, UNE-EN 61000-6-4, IEC 664, UNE-EN 55022

Serial communication

Protocol	Profibus

M-CVM-AB-Modbus-TCP (switch)
Expansion modules

CODE	TYPE	Communications	Protocol
M56E0A.	M-CVM-AB-Modbus-TCP (switch)	Ethernet	Modbus TCP/IP (gateway to TCP)

Creation date: 23/11/2026 - CIRCUTOR, SAU reserves the right to make technical changes or modify the content/images of this document without prior notice, in order to improve its reliability, functionality, design or for other reasons.
It accepts no liability for any errors, inaccuracies or possible lack of information in this document.



M-CVM-AB-Modbus-TCP (switch)

Expansion modules M-CVM-AB-Modbus/TCP (switch)

Code: M56E0A.

Dimensions

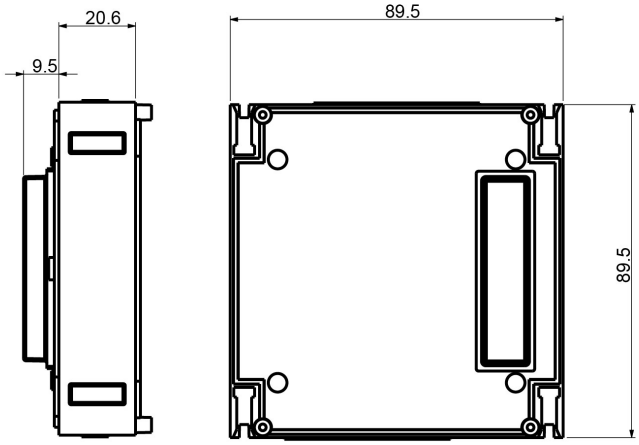

Connections

