

M-CVM-AB-Modbus-TCP (bridge)

M-CVM-AB-Modbus-TCP (bridge), Expansion module

Code: M56E05.

> Protocol: Modbus TCP/IP (gateway to RS-485)
> Memory: No
> Communications: Ethernet

Description

Expansion module with Modbus/TCP communications (Ethernet).

Application

Enables communications with SCADA systems, or similar, over TCP/IP computer networks using the Modbus/TCP protocol.

Creation date: 25/11/2026 - CIRCUTOR, SAU reserves the right to make technical changes or modify the content/images of this document without prior notice, in order to improve its reliability, functionality, design or for other reasons.
It accepts no liability for any errors, inaccuracies or possible lack of information in this document.



M-CVM-AB-Modbus-TCP (bridge)

Expansion modules M-CVM-AB-Modbus/TCP Bridge

Code: M56E05.

Specifications

DC power supply

Consumption	2W

Mechanical characteristics

Size (mm) width x height x depth	90 x 90 x 90 (mm)
Envelope	Self-extinguishing V0 plastic
Fastening	Panel
Weight (kg)	0,091

Environmental characteristics

Protection class	IP 30
Relative humidity (without condensation)	5 ... 95%
Storage temperature	-20... +80 °C
Working temperature	-10...+50 °C

Standards

Certifications	UL 61010-1 3rd edition, CAN/CSA-C22.2 No.61010-1 3rd. edition 2012-05
Electrical safety, Maximum height (m)	2000
Standards	IEC 61010-1 (1rd. Edition), UNE-EN 61000-6-2, UNE-EN 61000-6-4, IEC 60664-1, IEC 61010-2-030 (First Edition).

M-CVM-AB-Modbus-TCP (bridge)
Expansion modules

CODE	TYPE	Communications	Protocol
M56E05.	M-CVM-AB-Modbus-TCP (bridge)	Ethernet	Modbus TCP/IP (gateway to RS-485)

Creation date: 25/11/2026 - CIRCUTOR, SAU reserves the right to make technical changes or modify the content/images of this document without prior notice, in order to improve its reliability, functionality, design or for other reasons.
It accepts no liability for any errors, inaccuracies or possible lack of information in this document.



M-CVM-AB-Modbus-TCP (bridge)

Expansion modules M-CVM-AB-Modbus/TCP Bridge

Code: M56E05.

Dimensions

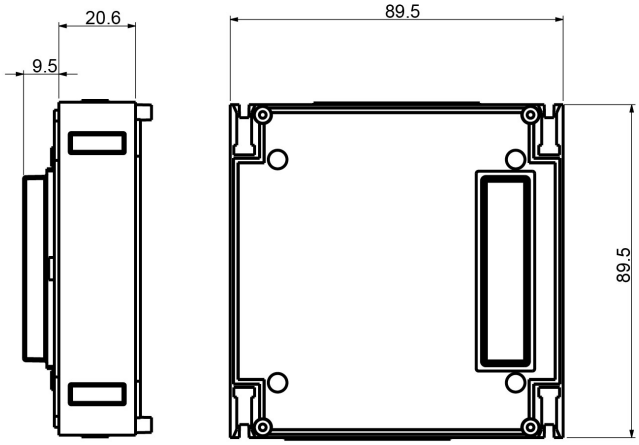

Connections

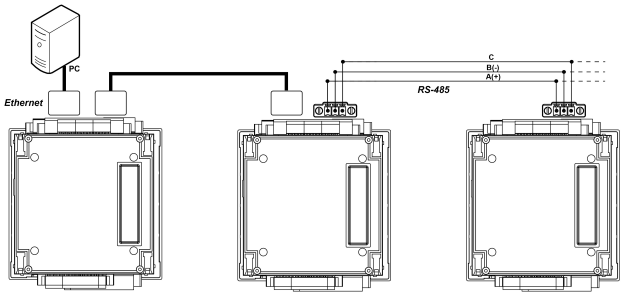

Creation date: 25/11/2026 - CIRCUTOR, SAU reserves the right to make technical changes or modify the content/images of this document without prior notice, in order to improve its reliability, functionality, design or for other reasons.
It accepts no liability for any errors, inaccuracies or possible lack of information in this document.